ENGINEERING
TOMORROW

Technical Information

Joysticks
JS1 Heavy Duty

Revision history

Table of revisions

Date	Changed	Rev
January 2017	Revised code numbers for flat profile push button colors	0503
January 2017	Removed information that does not apply, corrected PR2 grip options information	0502
December 2016	Added PVE information	0501
October 2016	Updated PR2 faceplate designation; and Environmental IP rating	0403
September 2016	Updated Operating temperature for CAN to 85° C in Environmental table	0402
September 2016	Updates regarding IP switches; Common model code for J3-cable	0401
September 2016	Various updates; updated to Engineering Tomorrow design	0302
February 2016	Removed Connection diagrams chapter	0201
February 2016	First edition	0101

Contents

Overview

Description....5
Features....5
Options....6

HR1 grip

Dimensions....8
Ten total grip functions....8
Function overview....9
Faceplate options....9
Cover options....10
Base options....11

ST2 grip

Dimensions....13
Five total grip functions....13
Faceplate options....14
Cover options....14

PR2 grip

Dimensions....16
Twelve total grip functions....16
Faceplate options....17
Cover options....18

ST7 grip

Dimensions....20
Faceplate options....21
Cover options....22

PR7 grip

Dimensions....24
Faceplate options....25
Cover options....27

Compatible grips

Dimensions....28

Base

Single and Dual axis base....29
Dimensions....30

Electronic modules

PVE—Standard....31
PVE—Extended....31
CAN J1939 Protocol....32
CANopen protocol....32

Connection diagrams

Sub-D 25....33
Standard....34
Extended....35

Specifications

Mechanical....36
Electrical—PVE (Standard and Extended)....36
Electrical—PVE (Extended only)....37
Electrical—CAN....37
Environmental....37

Joystick functions

Grip options....38
Push button....39
Roller....39

Contents

FNR ... 40
Toggle switch ... 41
Operator Presence switch ... 41

Connector options and cabling
One 6 pin connector ... 42
Two 6 pin connectors ... 42
One 12 pin connector ... 43
Two 12 pin connectors ... 44
Two 12 pin and one 6 pin connectors ... 45
One 25 and One 6 D-Sub pin connectors ... 46
Mating connectors bag assemblies ... 47
Cable assemblies ... 48

Product configuration model code
JS1-H base and grip model code fields ... 50
Base model code ... 51
Grip model code ... 53
Common model code ... 59

Product installation
Joystick safety critical functions ... 60
Machine wiring guidelines ... 60

Appendix: CAN J1939 protocol
Joysticks CAN J1939 protocol option ... 62
SAE J1939 basic joystick message ... 63
Data field ... 63
Basic joystick message data field descriptions ... 64
Joystick X-axis neutral position status ... 65
Joystick X-axis handle left negative position status ... 65
Joystick X-axis handle right positive position status ... 65
Joystick X-axis position status ... 65
Joystick Y-axis neutral position status ... 66
Joystick Y-axis handle back negative position status ... 66
Joystick Y-axis handle forward positive position status ... 66
Joystick Y-axis position status ... 66
Joystick button 1-8 pressed status ... 67
SAE J1939 extended joystick message ... 68
Extended joystick message parameters and data field descriptions ... 68
SAE J1939 error (DM1) messages ... 70

Appendix: CANopen protocol
CANopen Object Dictionary for JS1-H joysticks ... 72
Parameter/variable index ... 72
Error handling ... 83

Overview

Description

The Danfoss platform offers a wide variety of new grip designs and were developed after extensive research detailing operator needs. The JS1 heavy duty joysticks (JS1-H) and compatible grips meet the demanding conditions typically found in mobile equipment environments. The available grips features provide a high degree of protection from chemicals, shock, vibration and EMC exposure. Danfoss joysticks are appropriate for both in-cabin and out of cabin applications and feature ergonomic forms that minimize machine operator fatigue. The JS1-H ergonomic left-hand, right-hand and ambidextrous (ST2) grip design options enable efficient operation and comfortable human-machine interface with easy to use fingertip controls for maximum productivity. The grips feature a modular design that allows switch and proportional rollers locations flexibility.

Features

- Hall effect with two sensors per axis or long life potentiometer position sensing
- Simultaneous operation of two proportional rollers
- Operator Presence switch

Overview

Options

Axis
- Dual axis
- Single axis
- Single axis with friction

Output options
- CAN J1939
- CANopen

Ergonomic grip
- Right hand
- Left hand
- Ambidextrous (used with either the left or right hand)

On axis shaft, deflection
- ±18°

JS1-H grips
- HR1
- ST2
- ST7
- PR2
- PR7

HR1 grip

The horizontal, multifunction, ergonomic HR1 grip is designed with easy to use fingertip controls for a comfortable user interface and maximum functional control.

The grip features a modular design that allows flexibility in the location of switches and proportional functions.

HR1 grip

Dimensions

HR1 (horizontal) grip with base dimensions in millimeters [inches]

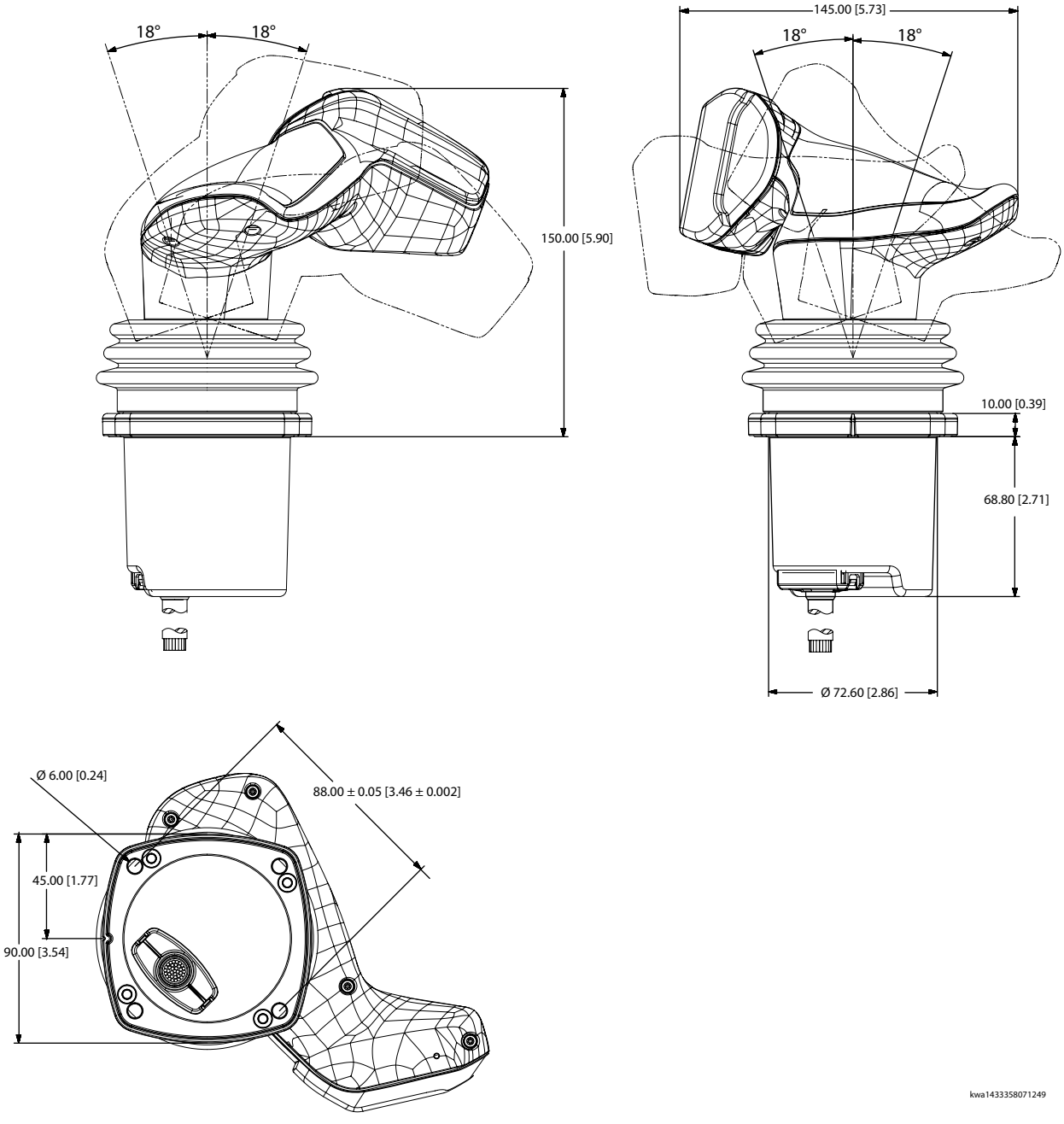

Ten total grip functions

- Front plate: Up to five functions
- Grip top side: Up to two functions
- Grip rear side: Up to three functions

Push button = 1 function, roller/rocker/FNR/Operator Presence Switch = 2 functions

HR1 grip

Function overview

HR1 grip function overview

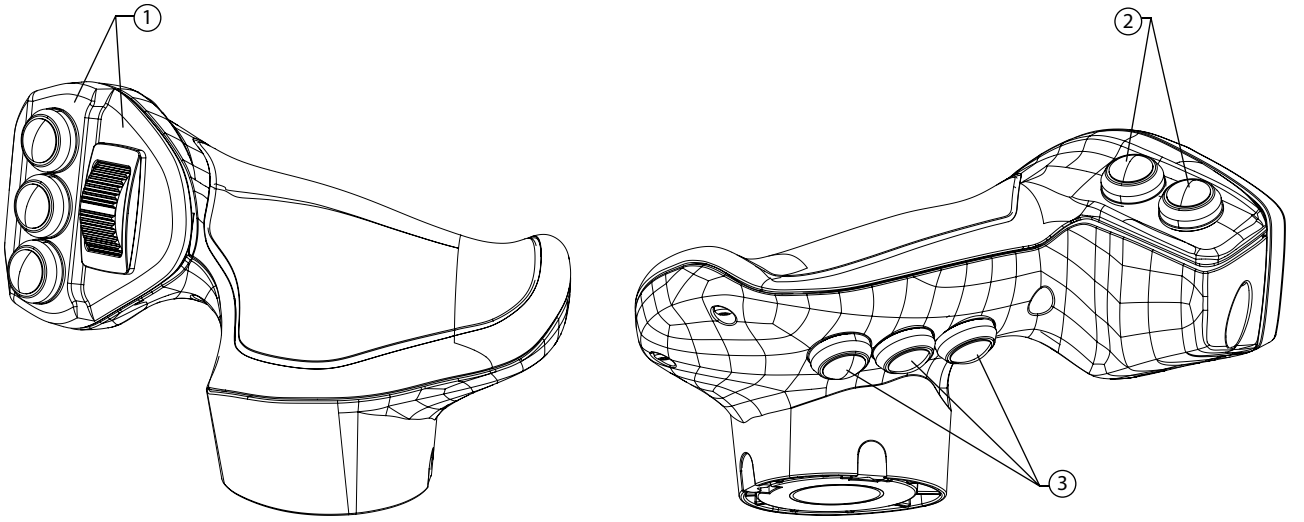

1. Faceplate finger function location
2. Cover finger function location
3. Base finger function location

Faceplate options

HR1 grip faceplate options

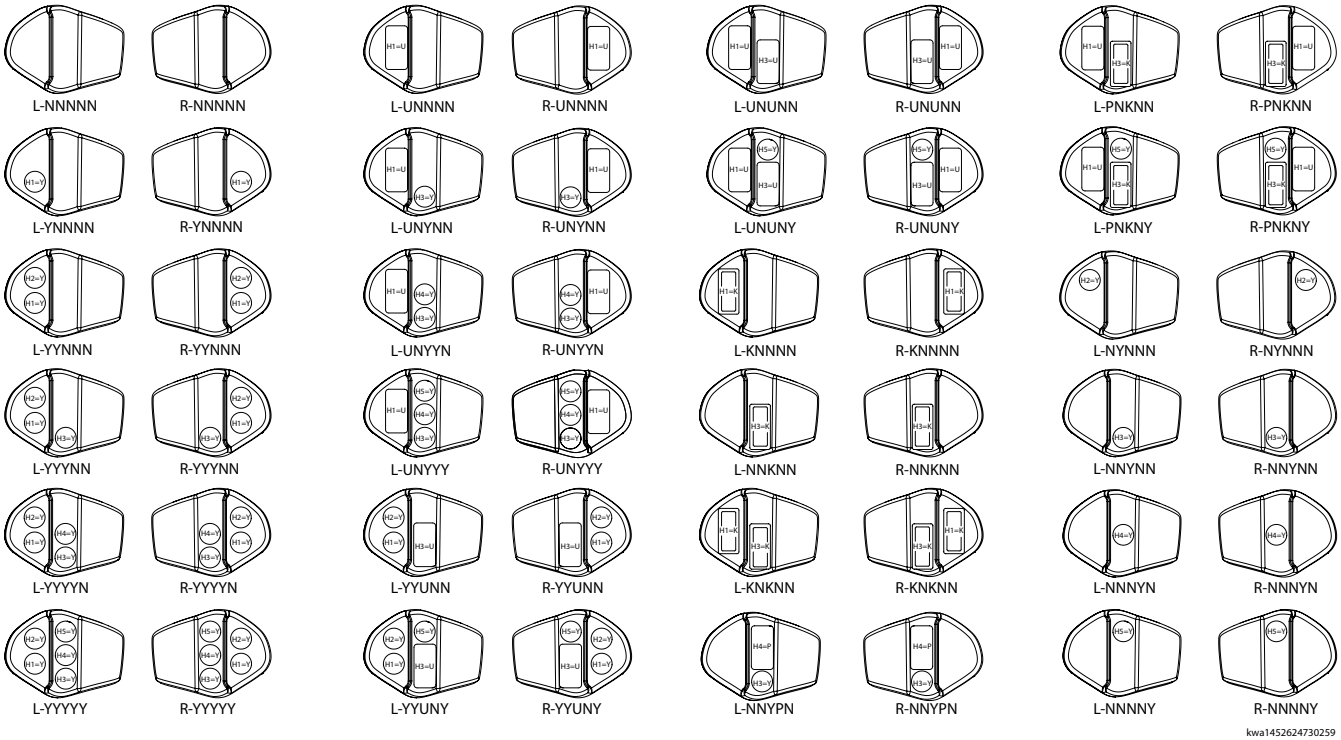

HR1 grip

Cover options

HR1 grip cover options

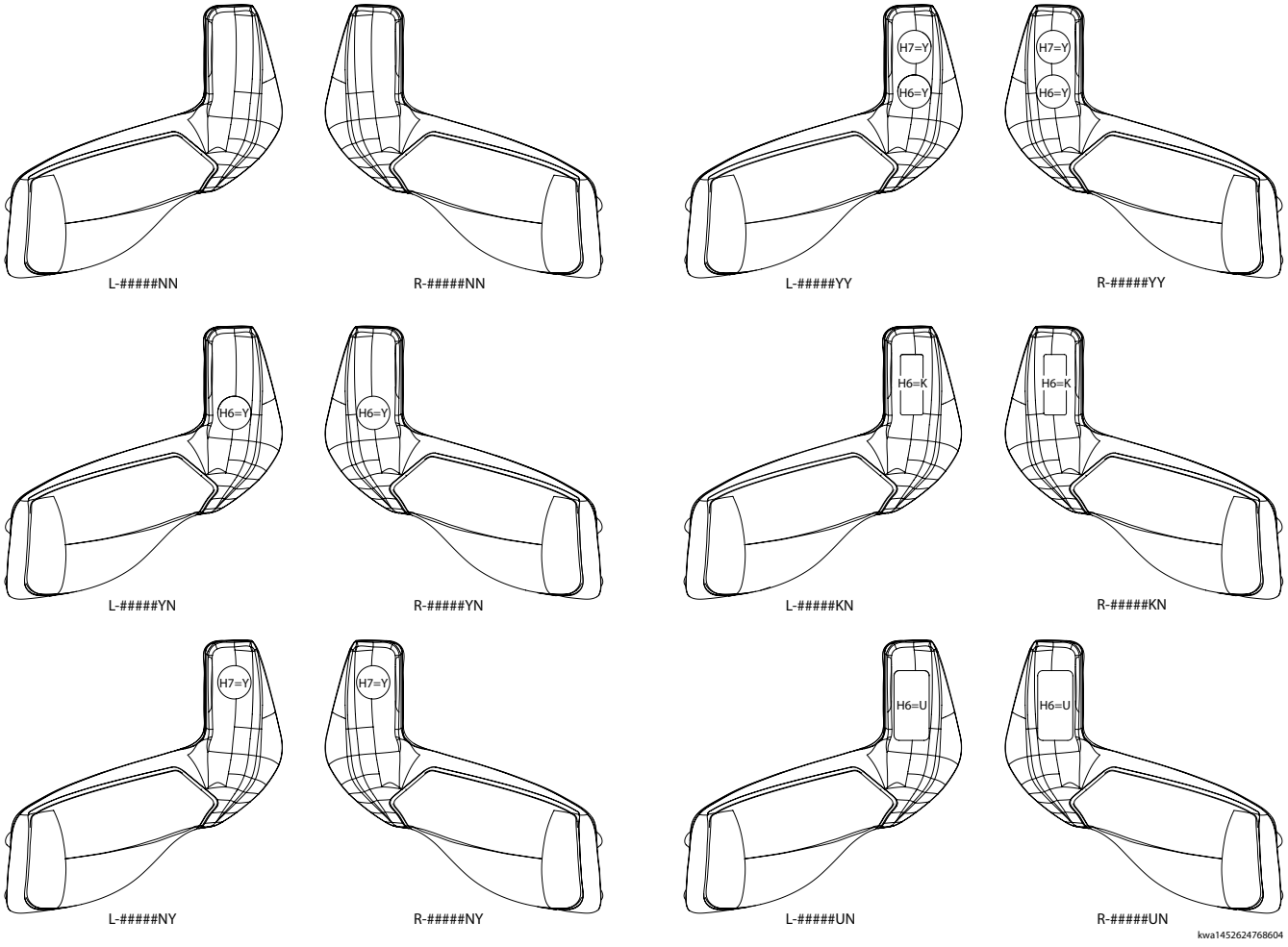

HR1 grip

Base options

HR1 grip base options

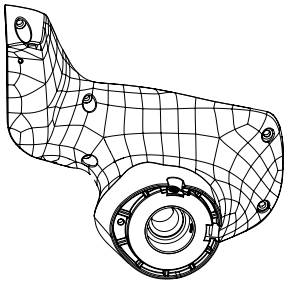
L-#######NNN

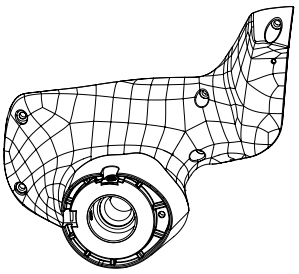
R-#######NNN

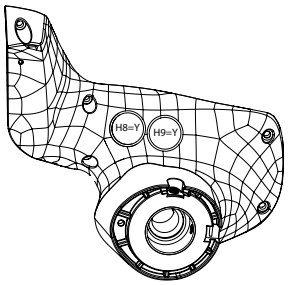

L-#######YYN

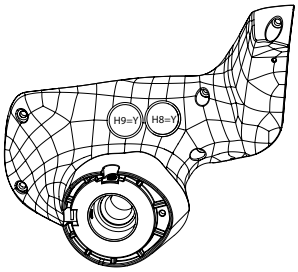

R-#######YYN

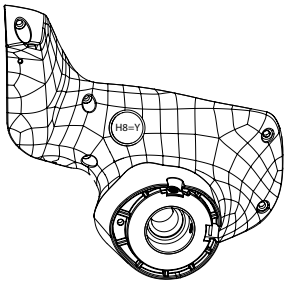

L-#######YNN

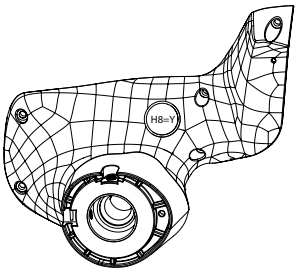

R-#######YNN

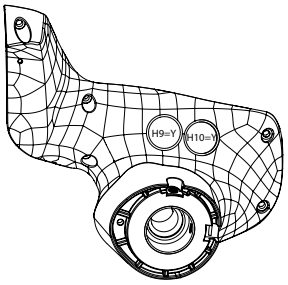

L-#######NYY

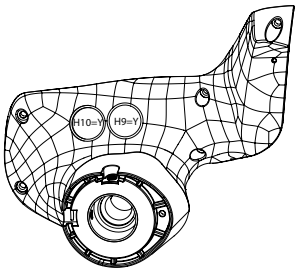

R-#######NYY

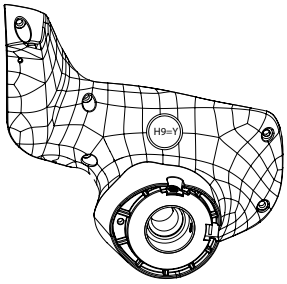

L-#######NYN

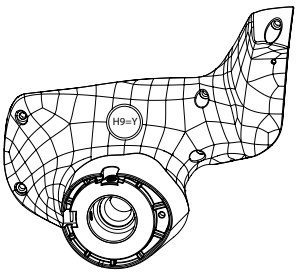

R-#######NYN

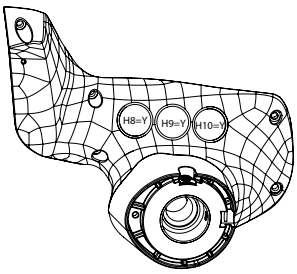

L-#######YYY

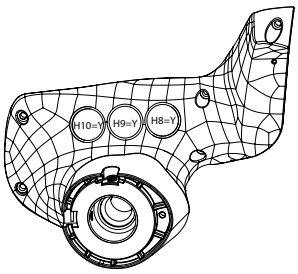

R-#######YYY

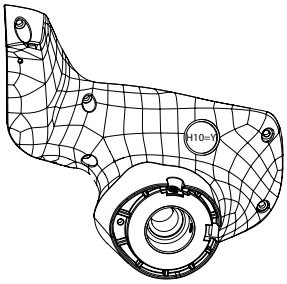

L-#######NNY

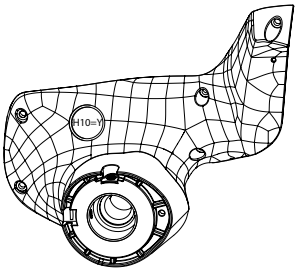

R-#######NNY

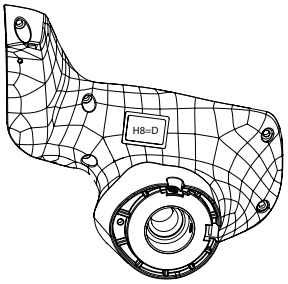

L-#######DNN

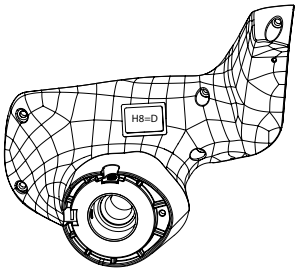

R-#######DNN

kwa1452624813199

ST2 grip

The ergonomic ST2 grip is designed to provide a solution to grip applications requiring an operator presence function. The profile of the ST2 grip, ensures that the operator's fingers are always close to the buttons to minimize operator fatigue and maximize functional control.

ST2 grip

Dimensions

ST2 grip with base dimensions in millimeters [inches]

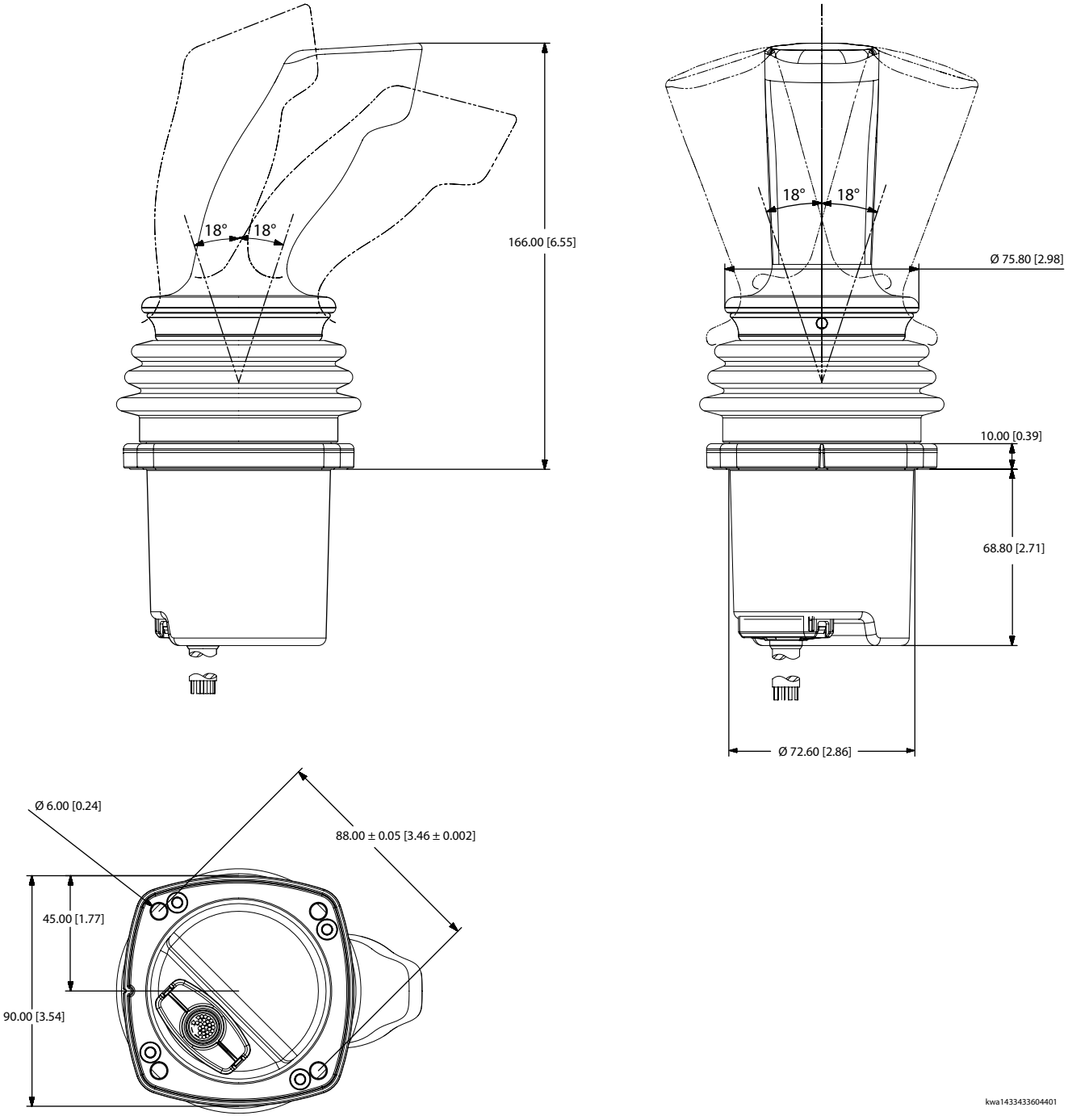

Five total grip functions

- Front plate: Up to three functions
- Pointer finger side: one function (if nothing is placed in position 2)
- Grip rear side: Up to two functions or an Operator Presence switch

Push button = 1 function, roller/rocker/FNR/Operator Presence Switch = 2 functions

ST2 grip

Faceplate options

ST2 grip faceplate options

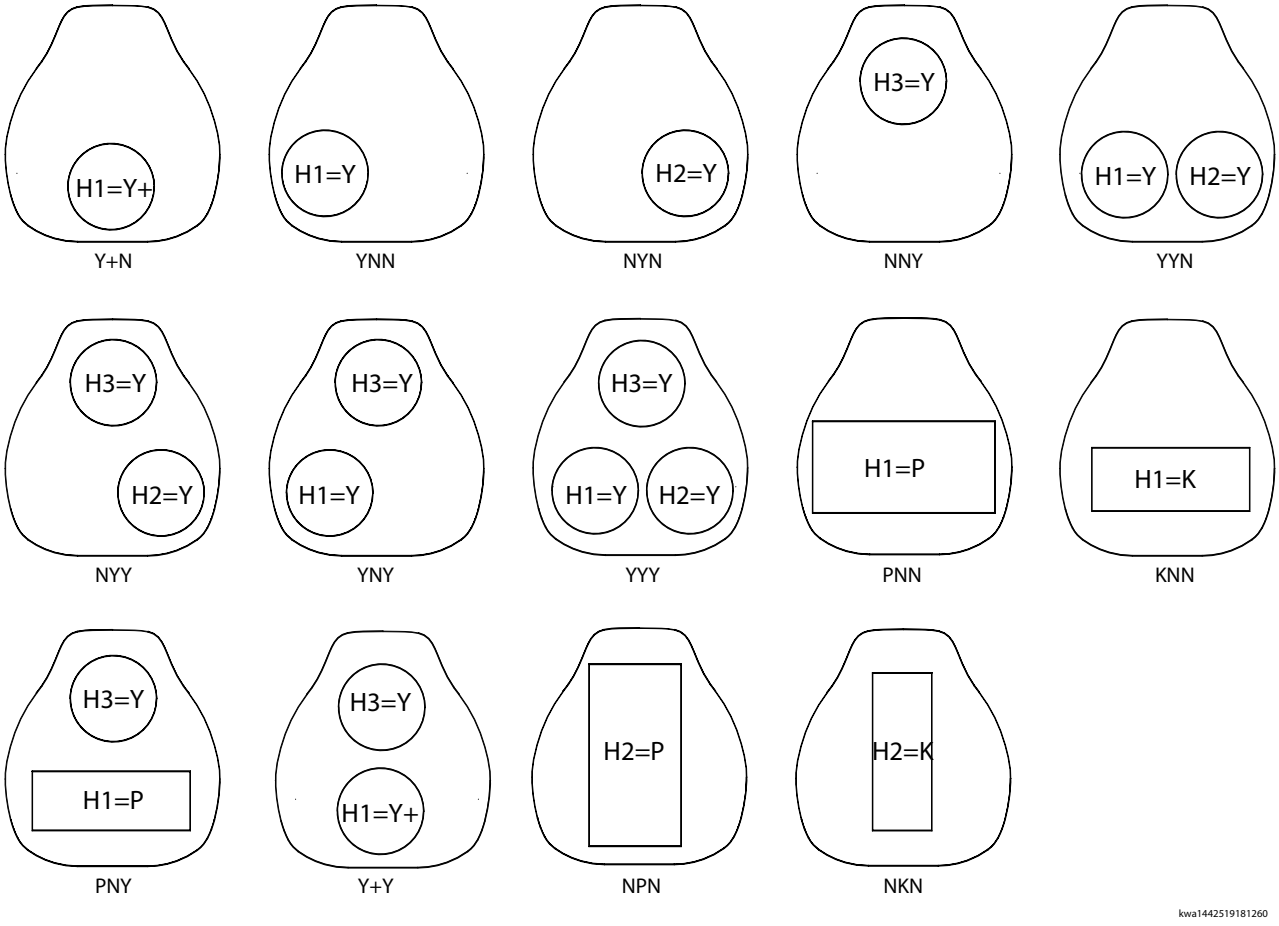

Cover options

ST2 grip cover options

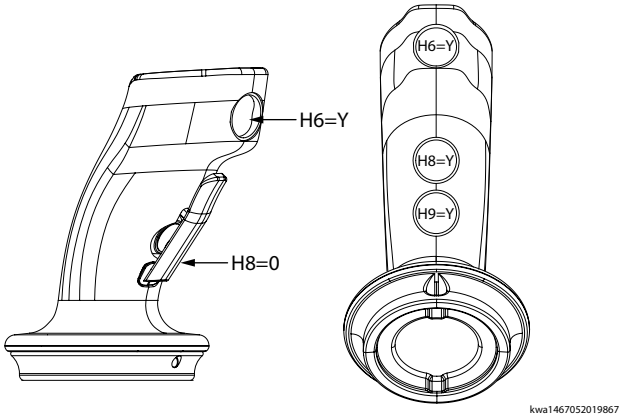

PR2 grip

The PR2 grip is the successor of the Prof 1. The grip features a forward-leaning, curved, ergonomic shape. The textured surface and movement pattern of the grip is designed for a comfortable user interface and maximum functional control.

PR2 grip

Dimensions

PR2 grip with base dimensions in millimeters [inches]

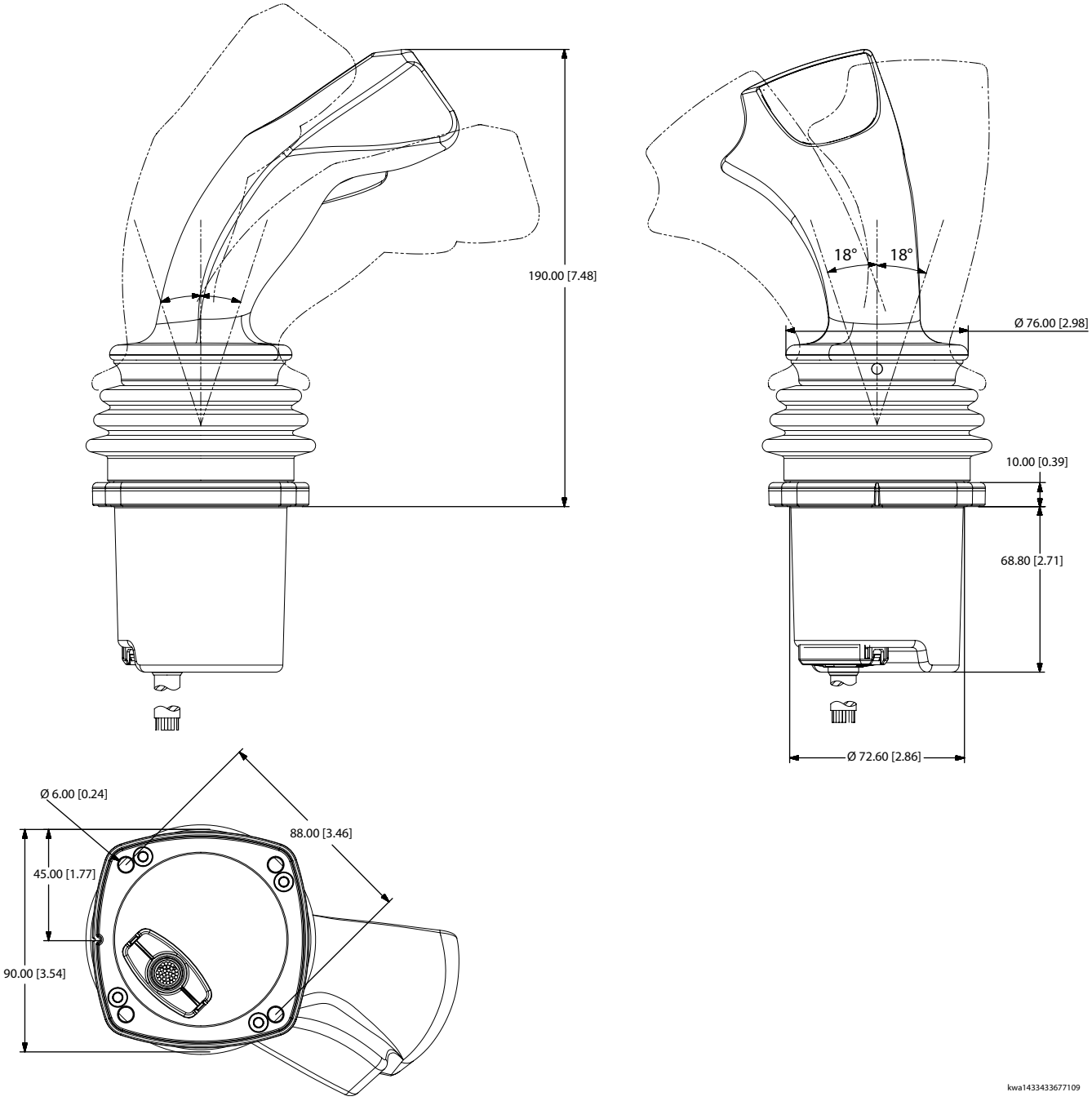

Twelve total grip functions

- Front plate: Up to five functions
- Grip left side: Up to three functions
- Grip right side: Up to two functions
- Grip rear side: Up to two functions or an OPS

Push button = 1 function, roller/rocker/FNR/Operator Presence Switch = 2 functions

PR2 grip

Faceplate options

PR2 faceplate options

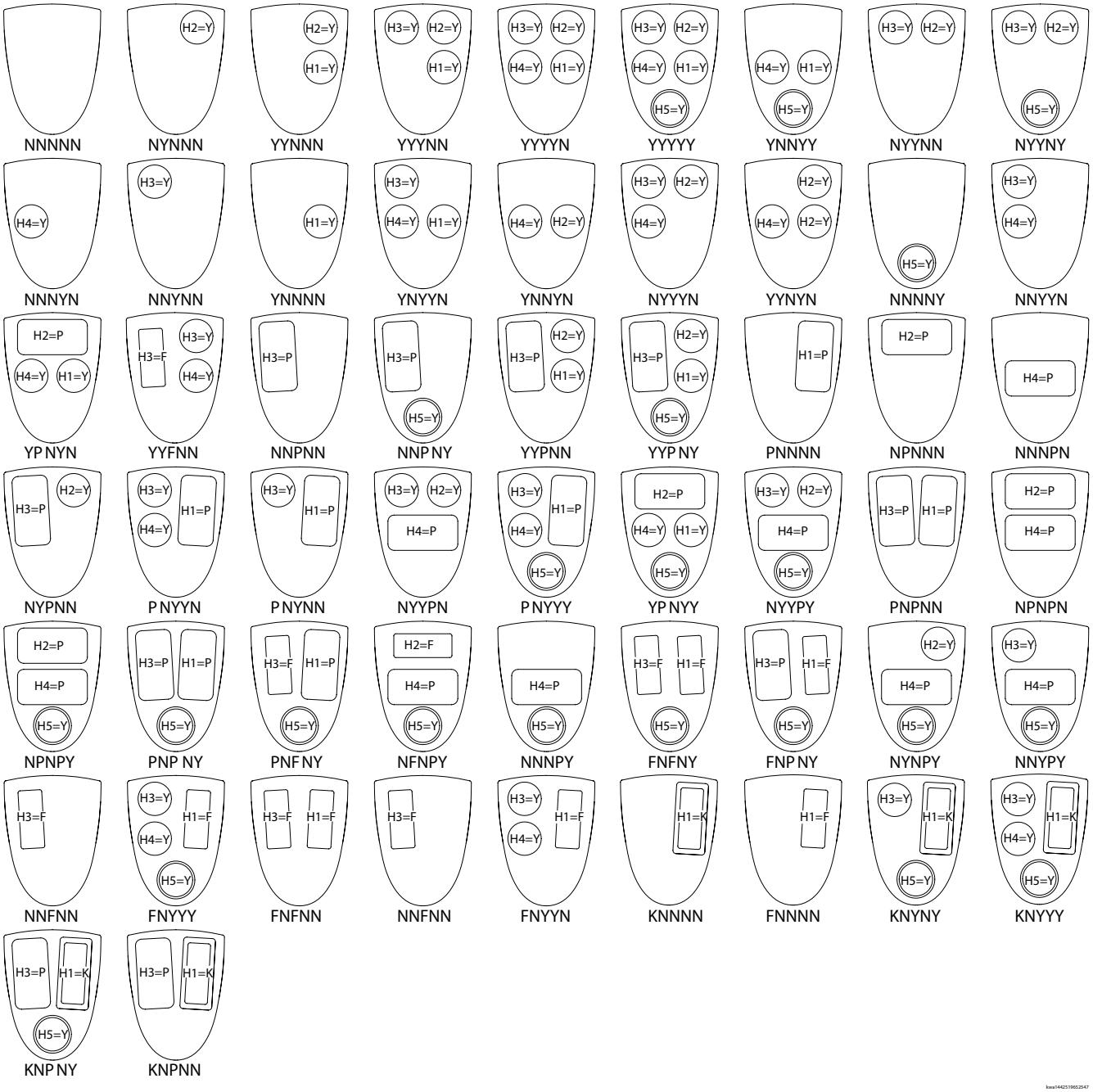

PR2 grip

Cover options

PR2 cover options

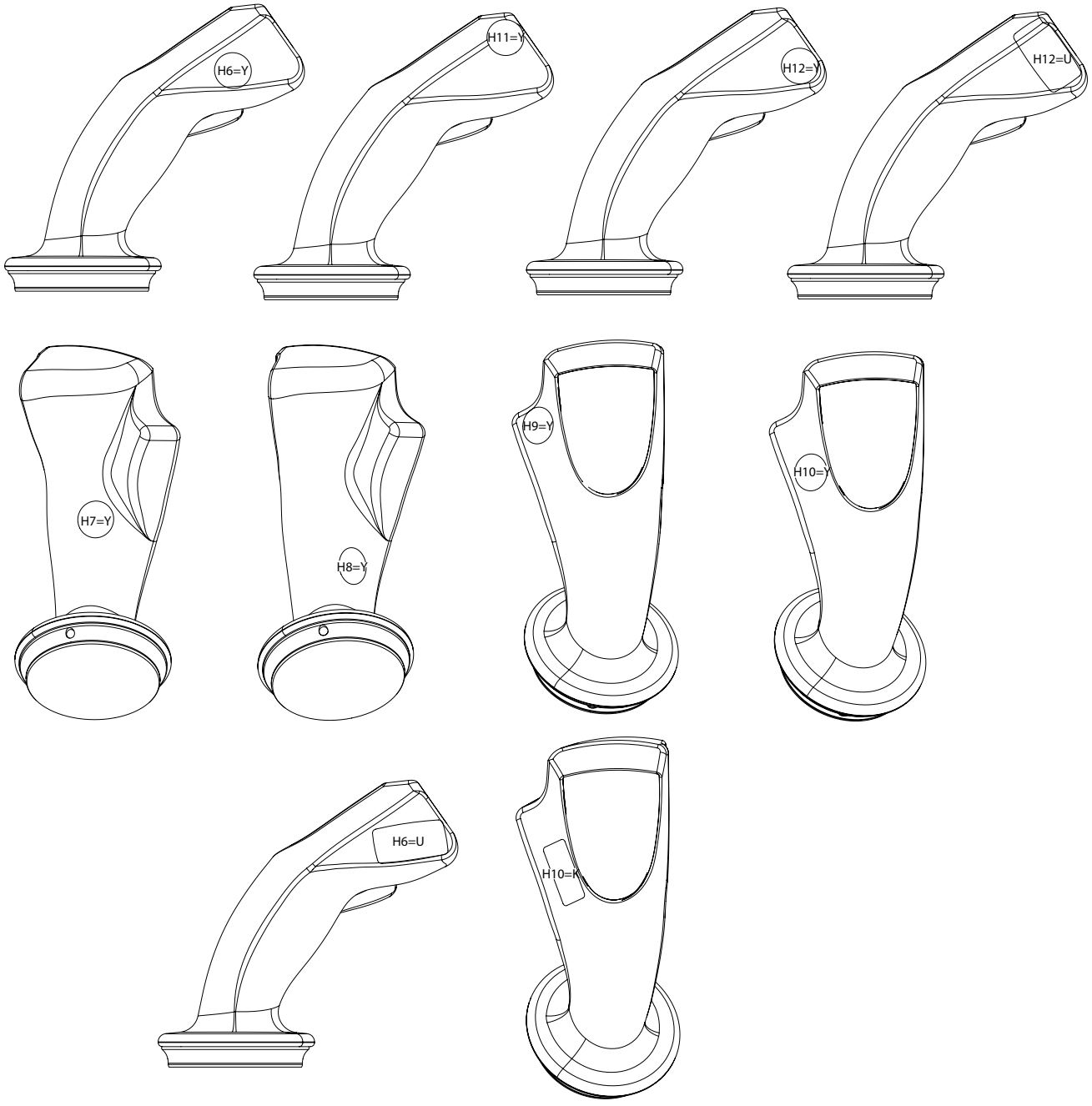

ST7 grip

The multifunction, ambidextrous, ergonomic ST7 grip is designed for a comfortable user interface and maximum functional control. The ST7 grip features a modular design that allows switch location flexibility.

The ST7 grip is available with combinations of up to 11 push-button switches, or a mix of proportional, FNR, rocker switches, and an Operator Presence switch.

ST7 grip

Dimensions

ST7 grip with base dimensions in millimeters [inches]

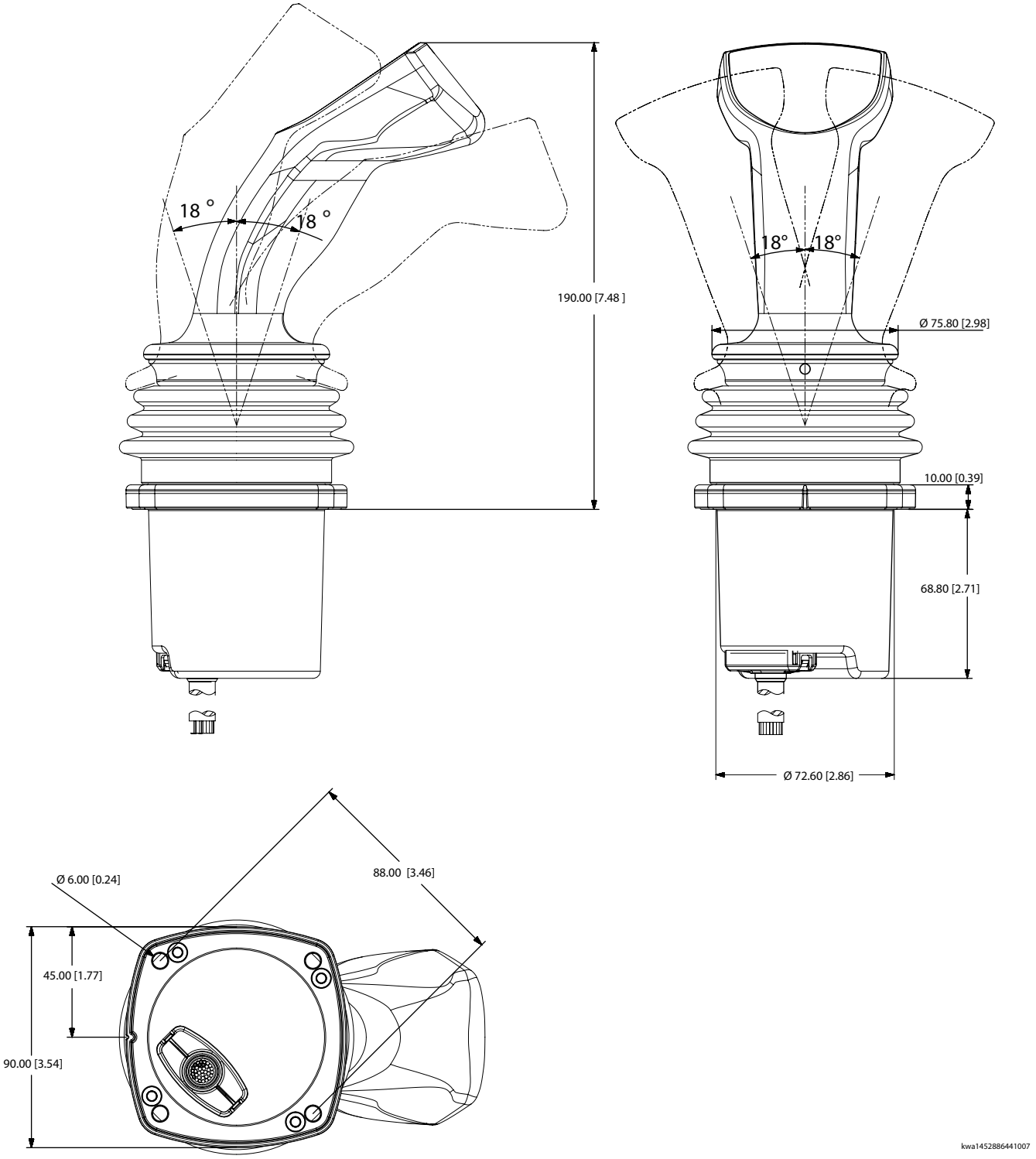

ST7 grip

Faceplate options

ST7 grip faceplate options

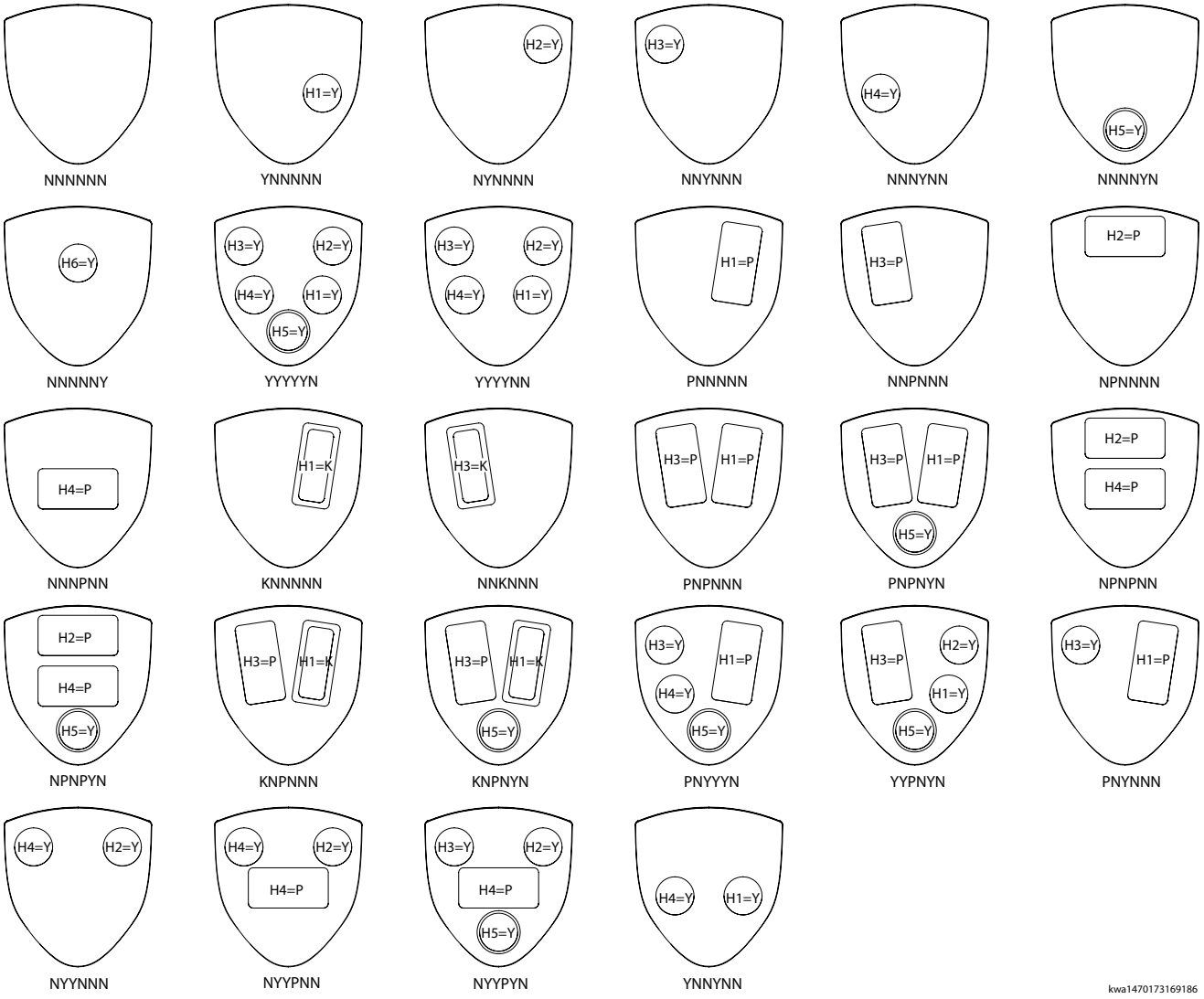

ST7 grip faceplate customer specified options

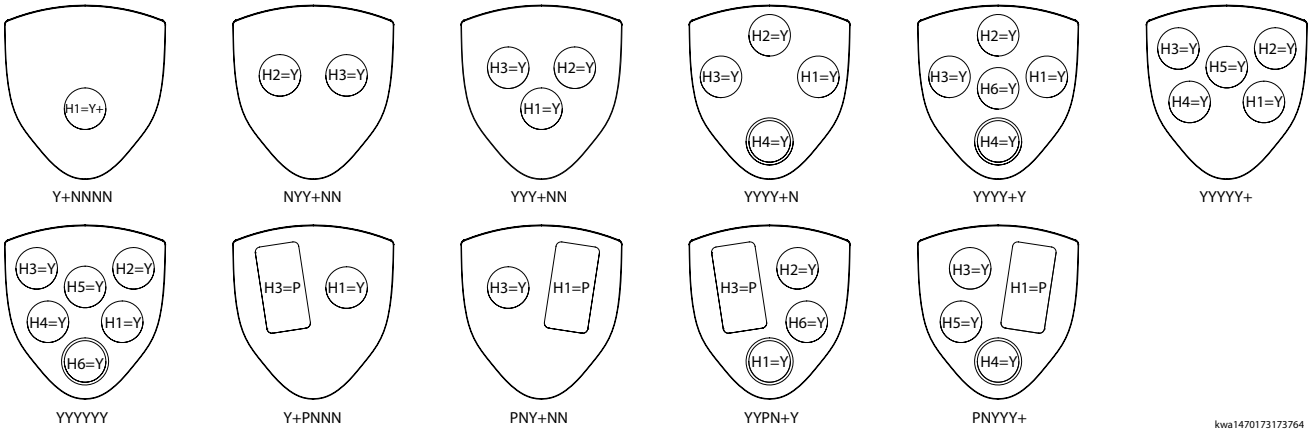

ST7 grip

Cover options

ST7 cover options

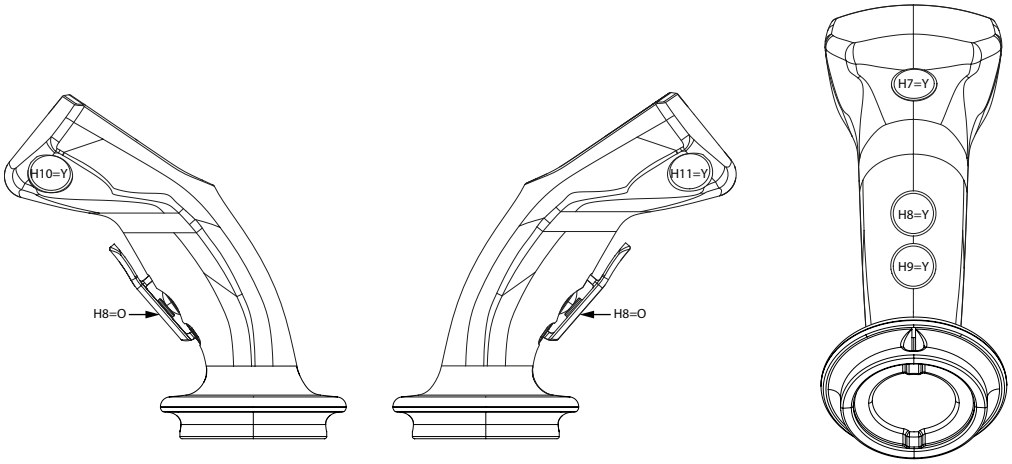

PR7 grip

The ergonomic PR7 left and right hand grips, with easy-to-use finger tip switches, are designed for ease of access to push-button, trigger switches and proportional grip function manipulation for a comfortable user interface and maximum functional control.

The PR7 grip features quicker adaptability, especially for new and complex machines, maximizing productivity in all operating conditions.

PR7 grip

Dimensions

PR7 grip with base dimensions in millimeters [inches]

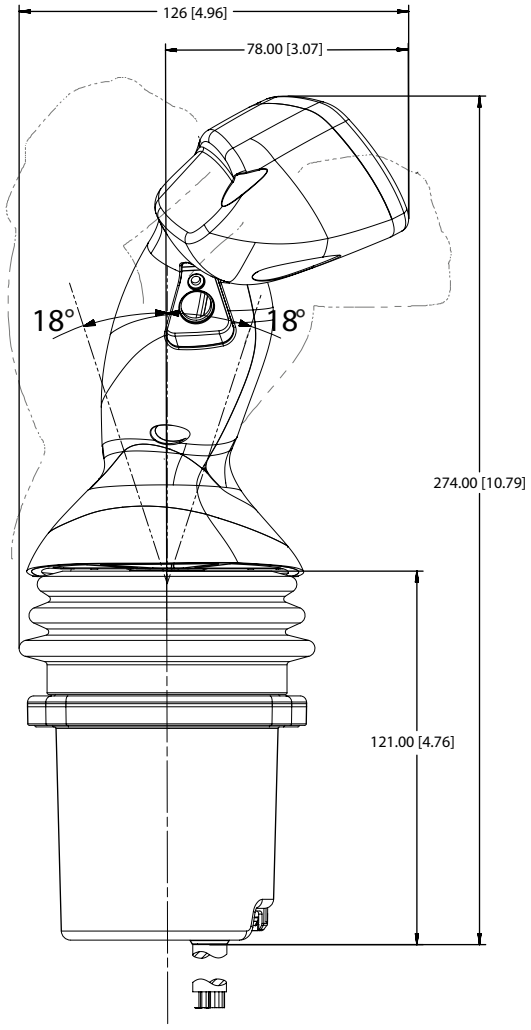

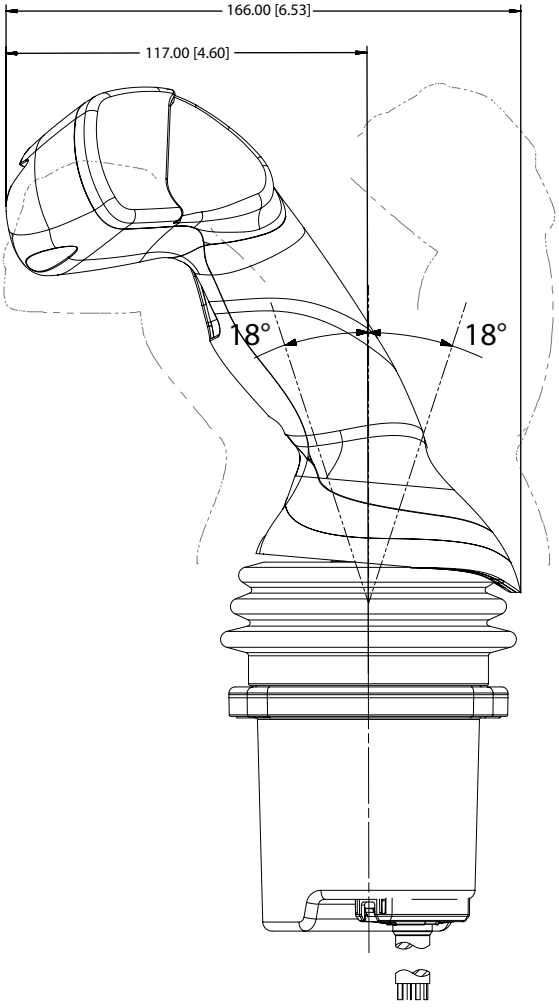

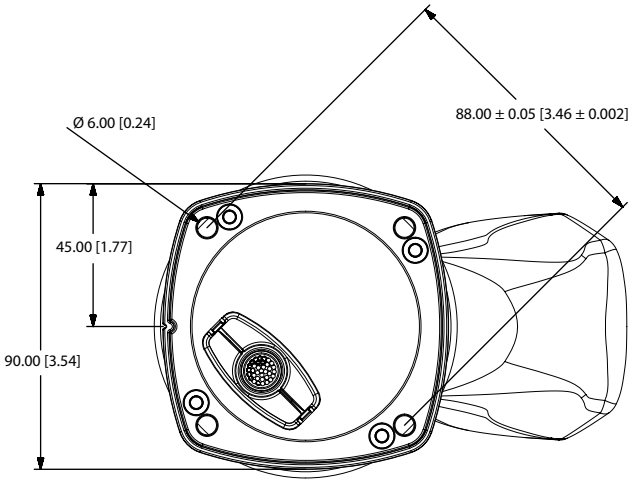

kwa1452895556296

PR7 grip

Faceplate options

PR7 faceplate options

PR7 grip

PR7 faceplate options (continued)

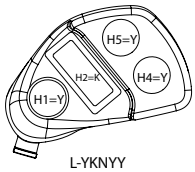

L-YKNYY

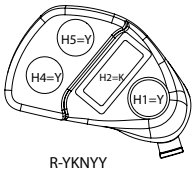

R-YKNYY

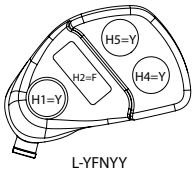

L-YFNYY

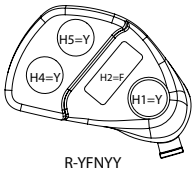

R-YFNYY

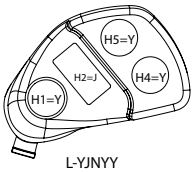

L-YJNYY

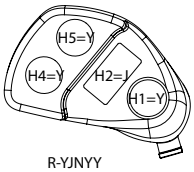

R-YJNYY

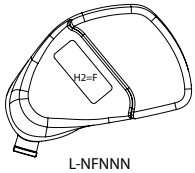

L-NFNNN

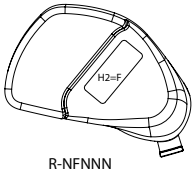

R-NFNNN

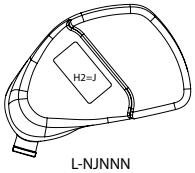

L-NJNNN

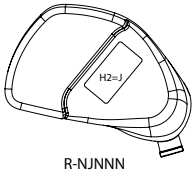

R-NJNNN

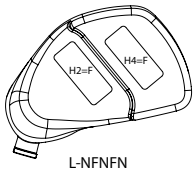

L-NFNFN

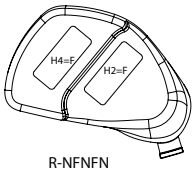

R-NFNFN

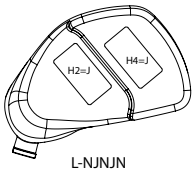

L-NJNJN

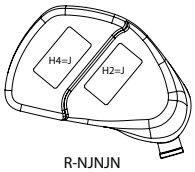

R-NJNJN

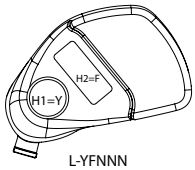

L-YFNNN

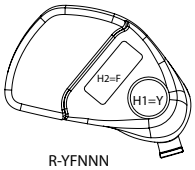

R-YFNNN

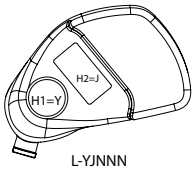

L-YJNNN

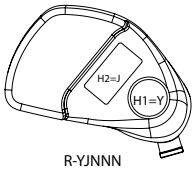

R-YJNNN

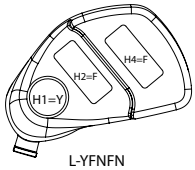

L-YFNFN

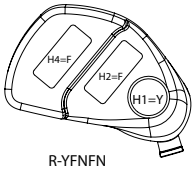

R-YFNFN

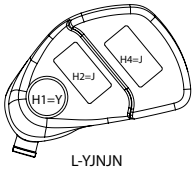

L-YJNJN

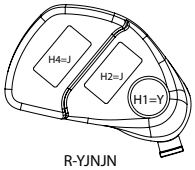

R-YJNJN

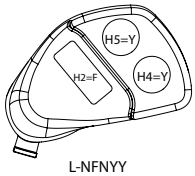

L-NFNYY

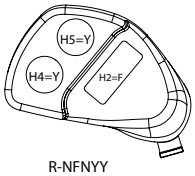

R-NFNYY

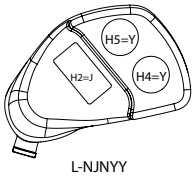

L-NJNYY

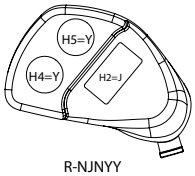

R-NJNYY

kwa1454539661351

PR7 grip

Cover options

PR7 cover options

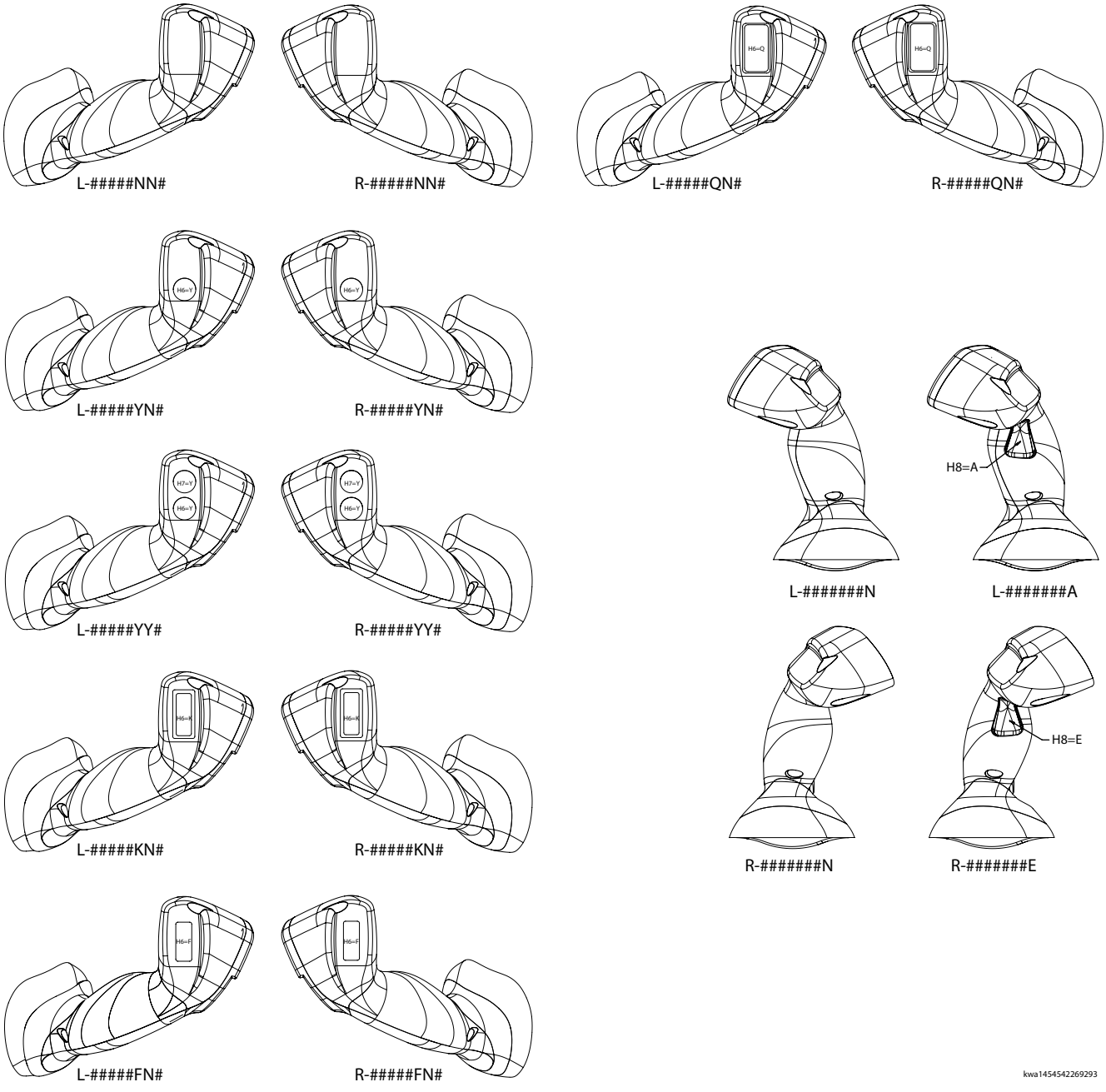

Compatible grips

Other Danfoss grips compatible with the JS1 heavy duty base are Prof1, PVRE and PVRET which are generally used together with valves. For more information regarding Prof1, PVRE and PVRET grips please reference *Prof 1, PVRE and PVRET Joystick Technical Information Manual*, **520L0541**.

Dimensions

PROF1; PVRE; and PVRET grips dimensions in millimeters [inches]

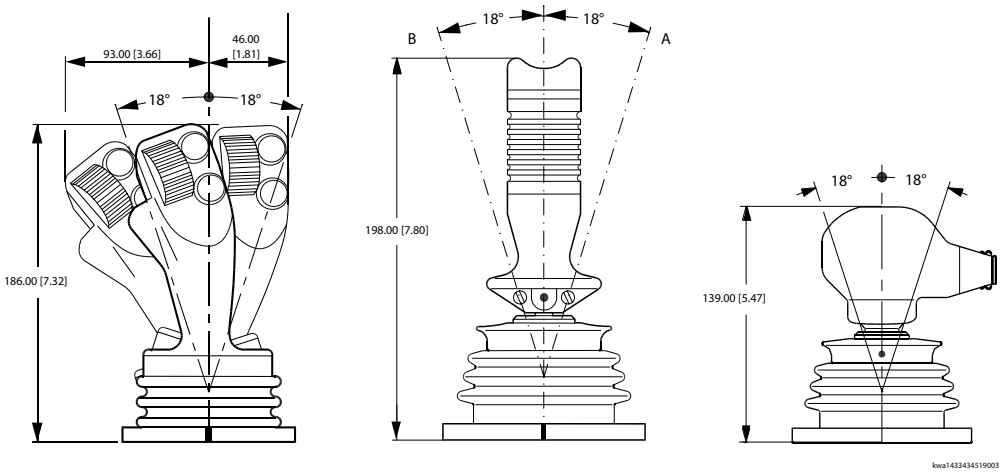

Base

Single and Dual axis base

Single axis with friction held base (on the left); Dual axis base spring return (on the right)

JS1-H handle variants use the same mechanical base. The interface to the grip, called the mounting flange, is an integrated part of the mechanical base that transfers grip movement to the electronics. Neutral positioning springs, which are part of the linkage, ensure a smooth return of the handle to the neutral position. The spring force is optimized to be strong enough to keep the grip in position, so the operation of the joystick or it is ergonomic characteristics are not impaired even during rough terrain.

Order code	Spring force
S	8 to 10 N
H	12 to 19 N

Additionally, a friction hold option is available for the JS1-H that keeps the joystick handle in a position set by the operator. This option is only available in a single Y-axis configuration. Two different levels of friction are available.

Friction level		Friction	Center detent
A	Low friction-Low detent	0.8 Nm	1.5 Nm
B	Low friction-High detent	0.8 Nm	2.0 Nm
C	High friction-High detent	1.6 Nm	3.0 Nm

Base

Dimensions

Friction held base; and Spring return base dimensions in millimeter [inches]

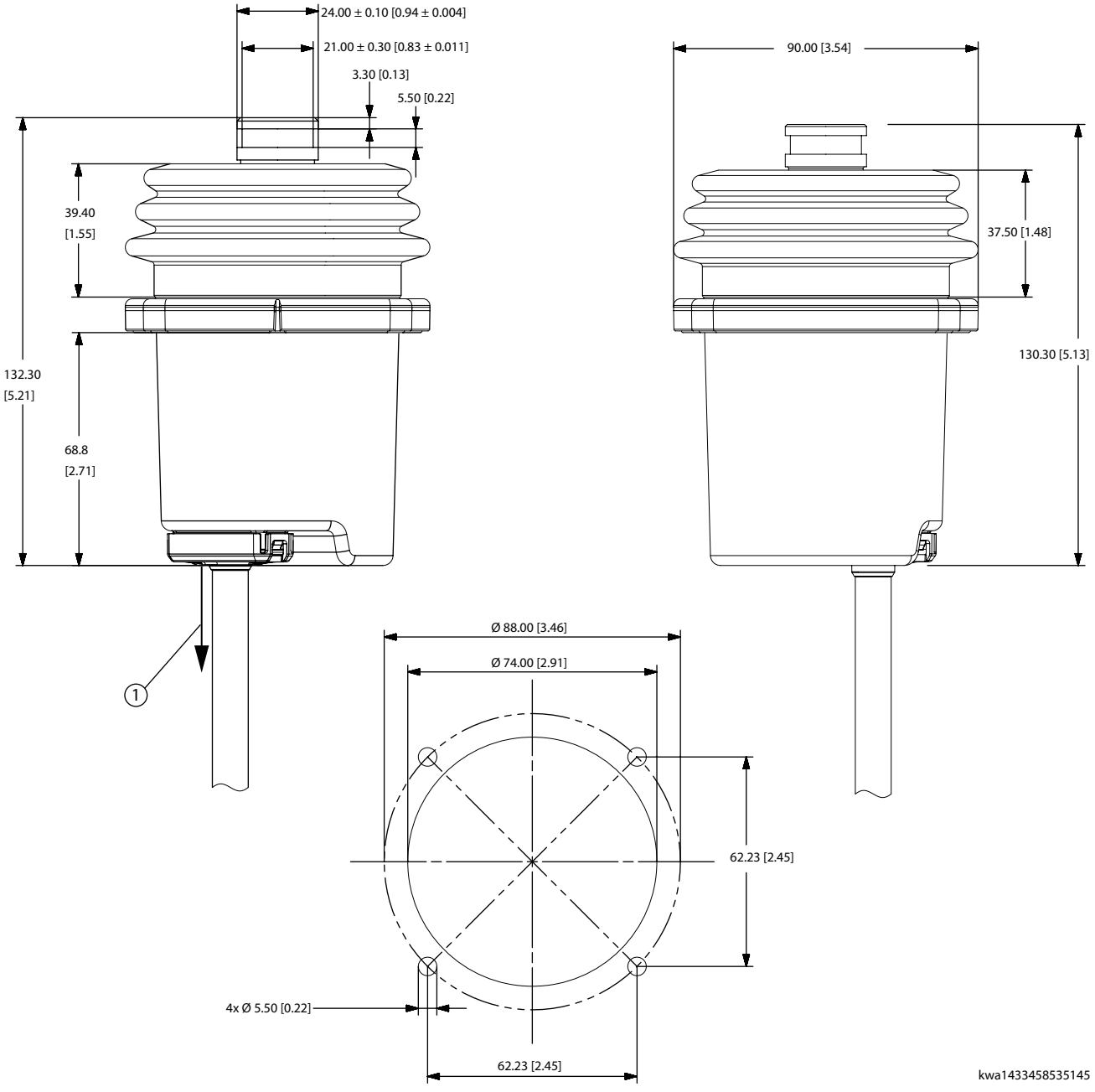

1. Minimum clearance from the bottom of the base:

- 25.4 mm (1 in) for the one and two 6 pin connector cables (CAN output)
- 40 mm (1.6 in) for all other cables

Mounting screws have a maximum torque of 7.9 N•m (69.9 in•lbf).

Electronic modules

PVE—Standard

The standard level electronic module provides amplifiers, inverting and signal relays on all proportional outputs, and an electronic switch on all On/Off outputs.

The signal relays are controlled by the power supply in such a way that a power failure will disconnect the output. When used together with a Danfoss proportional valve signal inversion, the joystick moves the spool in the direction opposite to the default. This is equivalent to swapping the hoses on the valve outlets.

The directional switches are not affected by the signal inversion.

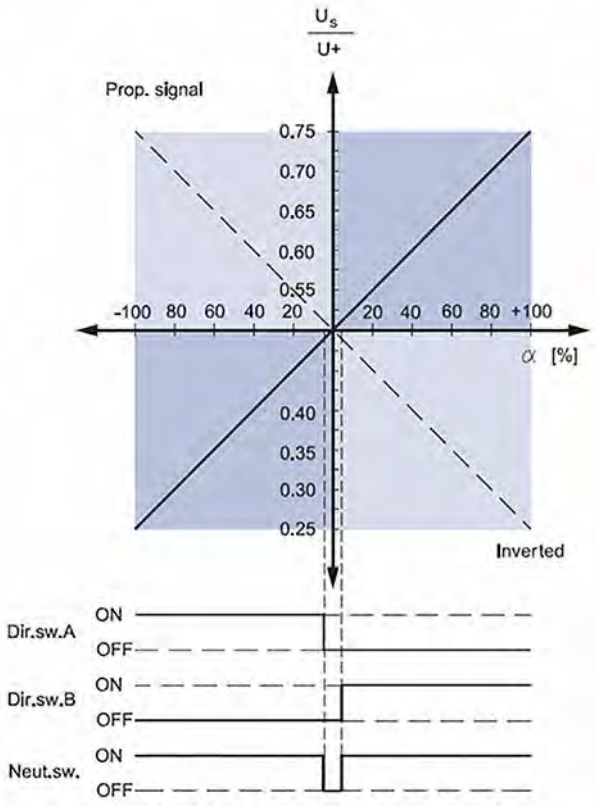

PVE—Extended

The extended level electronic module has the same configuration as the standard level module. Additionally it has adjustable proportional functions. The extended level module offers the option of individual signal adaption (flow adjustment) and common dead-band compensation.

Electronic modules

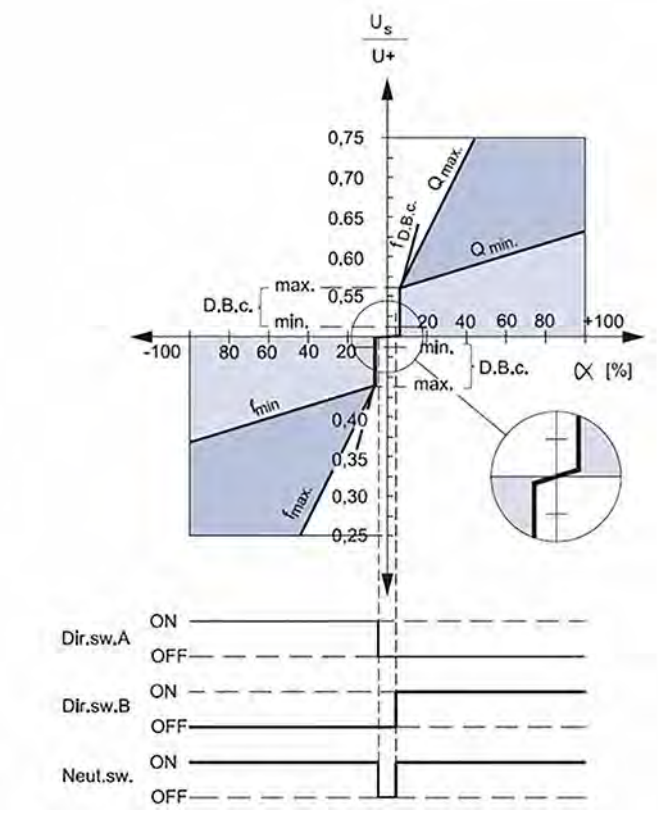

The dead band compensation ensures that the dead band of the valve is reduced to a minimum movement of the grip. The dead band compensation is only active outside the neutral range, which ensures normal amplification within the neutral position range. The dead band compensation is set for all four proportional functions on one potentiometer. For each proportional function there are two integrated potentiometers that independently control the gain for the A and B directions of the signal output without limiting the movement range of the handle (adjustable flow range). The gain of each function can be adjusted from 0.25 to 2.00. This has no effect within the dead band compensation.

CAN J1939 Protocol

The CAN J1939 output option provides conditioned joystick output information in J1939 message protocol.

CANopen protocol

The CANopen output option provides conditioned joystick output information in CANopen message protocol.

Connection diagrams

Sub-D 25

Numbers in {} indicate Samtec pin number, numbers in [] indicate DTM pin number.

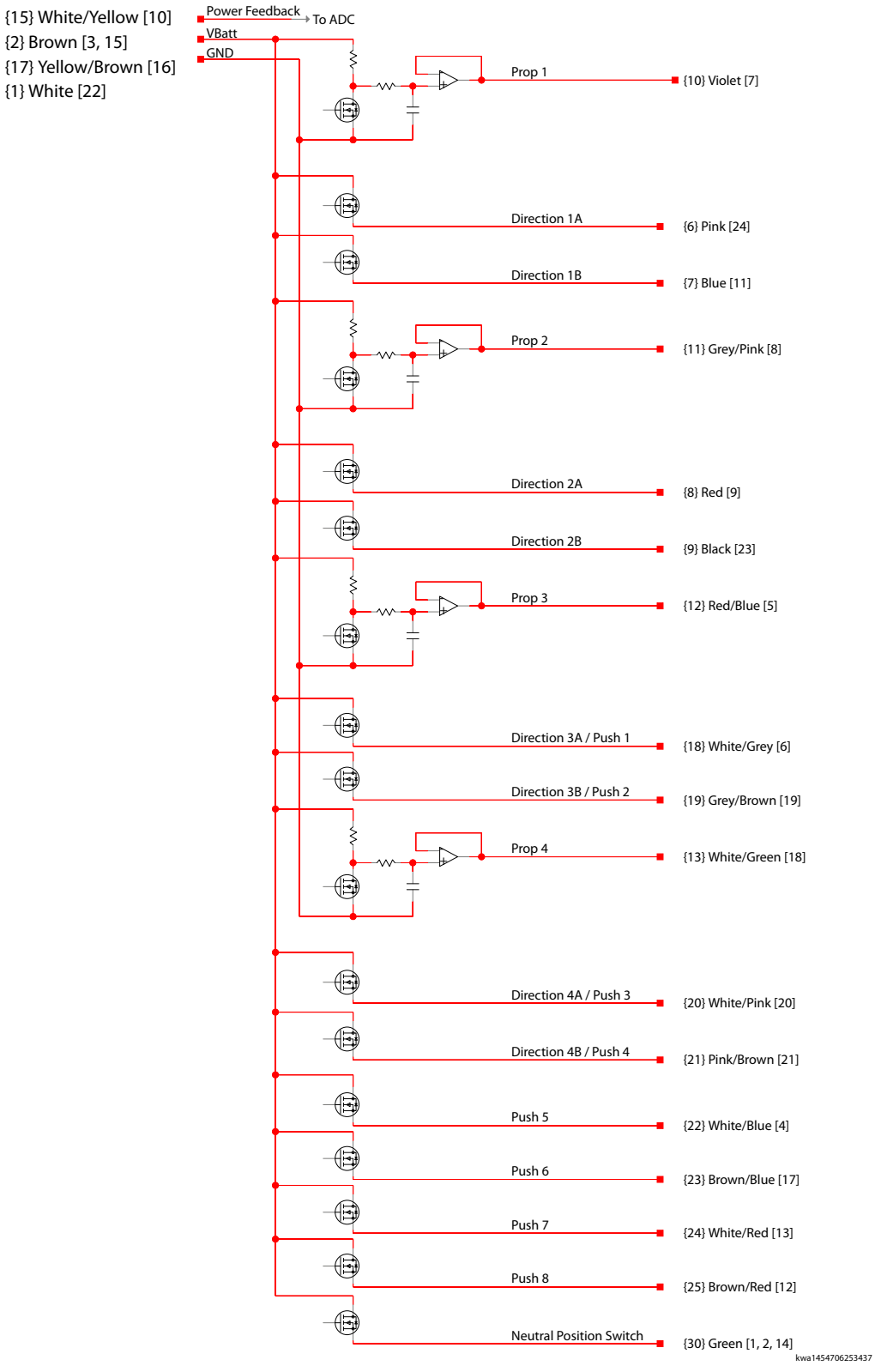

Connection diagrams

Standard

Numbers in {} indicate Samtec pin number, numbers in [] indicate DTM pin number

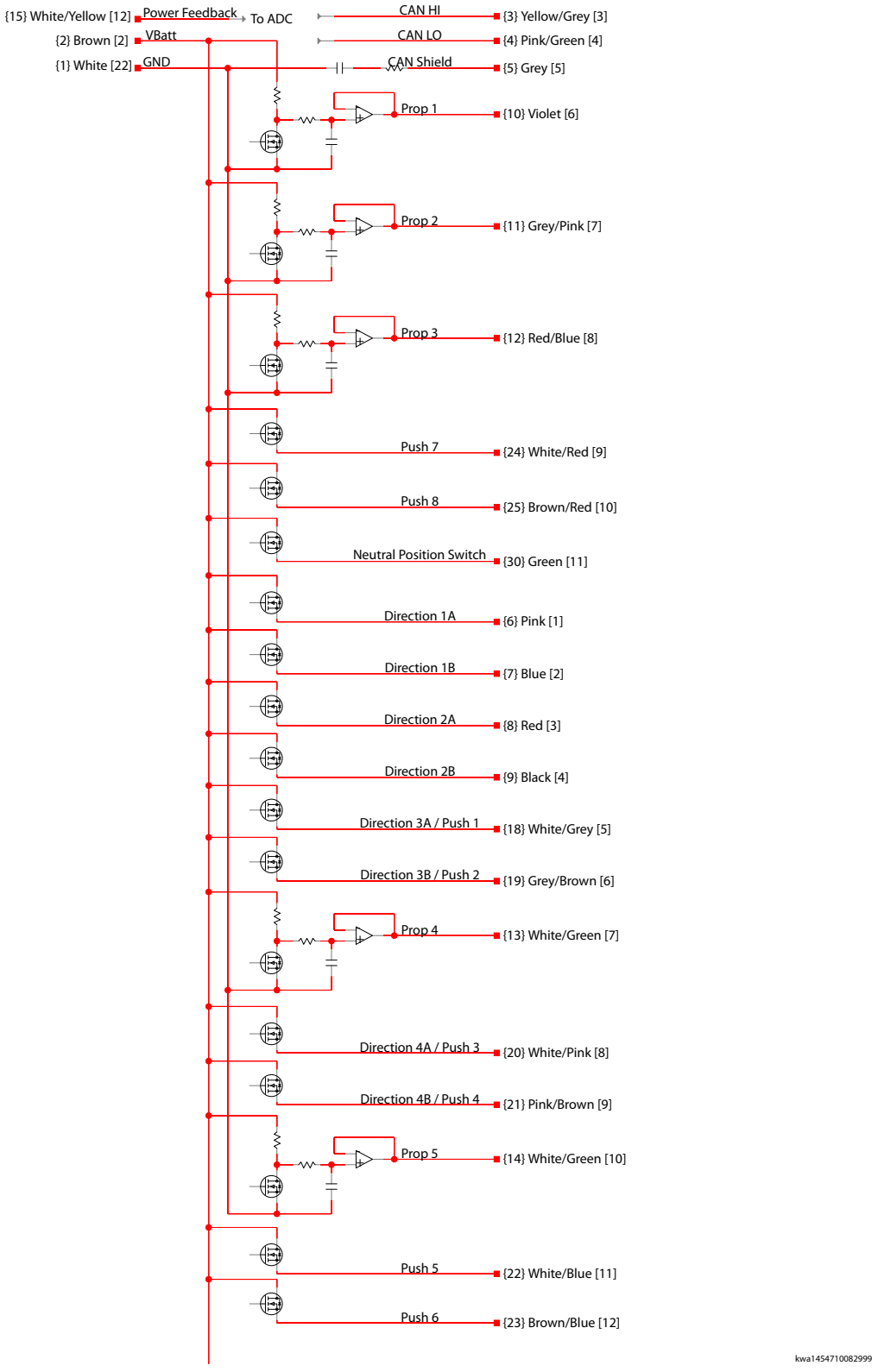

Connection diagrams

Extended

Numbers in {} indicate Samtec pin number, numbers in [] indicate DTM pin number

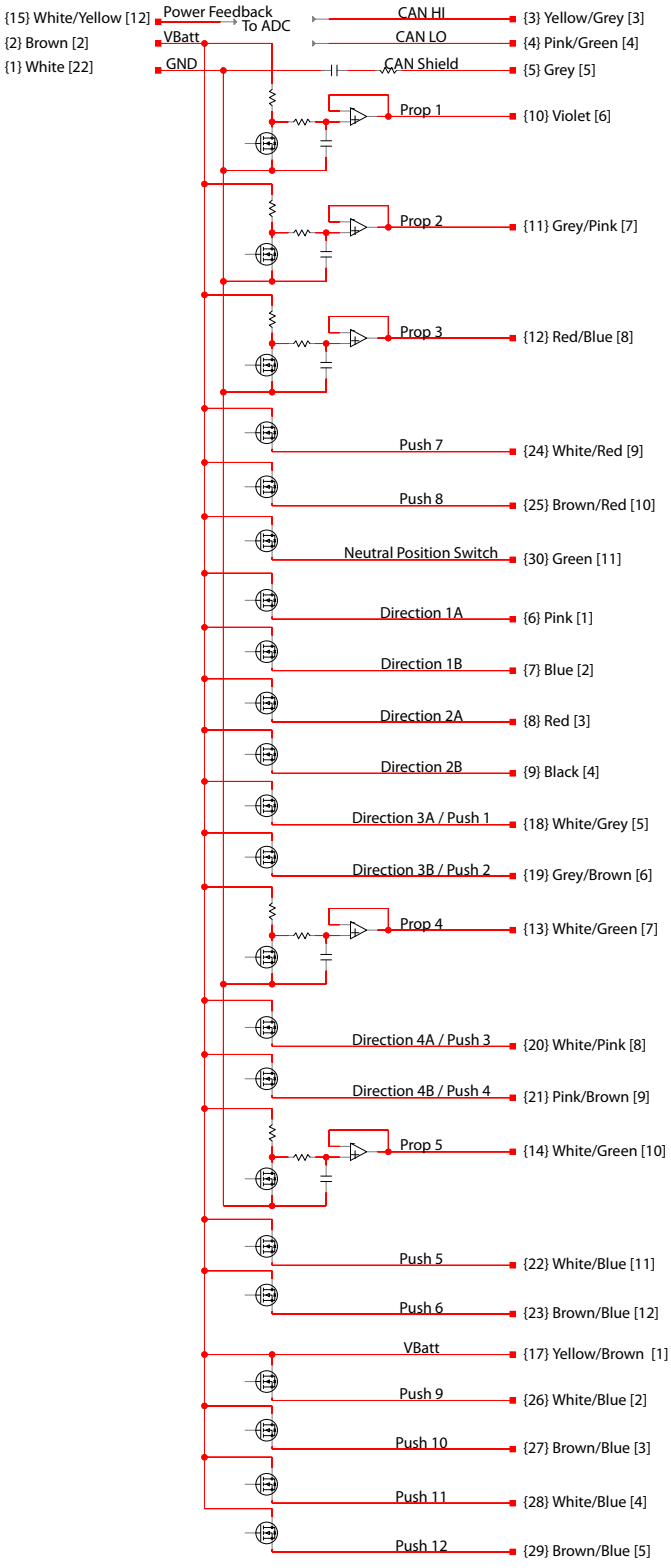

Specifications

Mechanical

Mechanical characteristics

Shaft mechanical angle limits	± 18°
Base mechanical life	Single axis with friction = 1 million full operating cycles
	Single axis and dual axis with spring return = 2.0 million full operating cycles
Maximum force on handle	1000 N
Maximum torque	15 Nm
Base only mass	0.75 kg (1.65 lbf)
Weight (base without grip)	725 G (1.8 lb)
Vertical maximum load	6000 N (1350 lbs)

Spring return

Breakout load on axis	Standard duty spring: 6 to 8.5 N (3.37 to 5.71 lbf)
	Heavy duty spring: 12 to 19 N (2.698 to 4.271 lbf)

Friction hold

Friction level		**Friction**	**Center detent**
A	Low friction-Low detent	0.8 Nm	1.5 Nm
B	Low friction-High detent	0.8 Nm	2.0 Nm
C	High friction-High detent	1.6 Nm	3.0 Nm

Electrical—PVE (Standard and Extended)

Electrical—PVE (Standard and Extended) characteristics

Supply voltages	**U_{DC}**		9 to 36 Vdc
Current consumption			150 mA
Sensor type			Hall effect with redundant sensors
			Potentiometer
Signal voltage U_S	**Minimum to maximum**		0.25 to 0.75
	Neutral position		0.50
Signal load in neutral position	**Load type**	**PVE**	**Other**
	Load impedance	>6 kΩ	>15 kΩ
Signal current at maximum movement	**U_{DC} = 12 V**	**6 kΩ**	**15 kΩ**
		± 0.6 mA	0.2 to 0.6 mA
	U_{DC}= 24 V	± 1.2 mA	0.4 to 1.2 mA
Signal current in neutral position	**U_{DC} = 12 V**	± 0 mA	± 0.4 mA
	U_{DC}= 24 V	± 0 mA	± 0.8 mA
Inverter	**Non inverted**		Output signal = U_s
	Inverted		Output signal = -1 x (U_s -0.5 x U_+) + 0.5x U_+
Maximum load for push buttons and directional switches for all proportional functions			0.6 A
Neutral position switch			3 A

Specifications

Electrical—PVE (Extended only)

Electrical—PVE (Extended only) characteristics

Signal regulation U_s	**U_s Minimum (50%)**	0.37 to 0.63 at 100% movement
	U_+ Maximum (200%)	0.25 to 0.75 at 50% movement
Dead band compensation	**U_s Minimum**	0.00
	U_+ Maximum	0.06

Electrical—CAN

Electrical—CAN characteristics

Sensor type	Hall effect with redundant sensors
	Potentiometer
Resolution	12 bit
Supply voltage (V_s)	9 to 36 Vdc
Output	J1939 and CANopen protocols
Base maximum current consumption	120 mA at 9V
Base maximum survival supply voltage	68 Vdc

Environmental

Environmental characteristics

Operating temperature	CAN	-30° C to 80° C (-22° F to 176° F)
	PVE	-30° C to 70° C (-22° F to 158° F)
Storage temperature		-40° C to 85° C (-40° F to 185° F)
EMI/RFI rating	150 V/m	
Vibration	25 G, 10 ms, 500 bumps in each of 6 directions IEC 60068-2-29 test Eb	
Shock	50 G, 11 ms, 3 shocks in each of 6 directions IEC 60068-2-29 test Ea	
Ingress Protection (IP) rating	Up to IP 66 (dependent on grip sealing selected)	

For more inforamtion regarding Ingress Protection (IP) rating eference F2—Grip type, *Grip model code* on page 53

Joystick functions

Grip options

Name	Image	Option	Switch functions quantity	Push buttons quantity	Roller/rocker quantity	Alternative configuration
HR1		Left hand and right hand grip	10	10	3	2 rollers or rockers with 4 push buttons
ST2		Ambidextrous grip	5	5	1	1 roller or rocker with 1 push button and 1 Operator Presence switch
PR2		Left hand and right hand grip	12	11	3	3 rollers or rockers with 3 push buttons and 1 Operator Presence switch
ST7		Ambidextrous grip	11	11	2	2 rollers or rockers with2 push buttons and 1 Operator Presence switch
PR7		Left hand and right hand grip	8	7	3	3 rollers or rocker with 1 push button and 1 trigger switch

Joystick functions

Push button

Name	View	Description	Data	Code number
Flat profile		Action	Momentary	11174908-Black 11174907-Red 11174906-Yellow 11174909-Gray
		Type	Single pole, NO	
		Current rating	30 Vdc/50 mA	
		Connection in base	Use 1 function	
		Mechanical life	1 million cycles	
		Operating force	1 to 2.5 N (100 to 250 g)	
		Ingress protection, IP rating	IP 66	
		Operating temperature	-30°C to 60°C (-22°F to 140°F)	

Name	View	Description	Data	Code number
Dome shape		Action	Momentary	11167315-Yellow 11167314-Black 11167271-Red
		Type	SPST-NO-DB	
		Current rating	30 Vdc/50 mA	
		Connection in base	Use 1 function	
		Mechanical life	1 million cycles	
		Operating force	Nominal 3 N (306 g)	
		Ingress protection, IP rating	IP 66	
		Operating temperature	-40°C to +85°C C (-40°F to 185°F)	

Roller

Name	View	Description	Data	Code number
Roller—5mm (use only on the faceplate)		Action	Spring return to neutral	162B3100—P 162B3109—S
		Output	Max. voltage: 30 Vdc	
			Proportional signal: 25% - 50% - 75%	
			Impedance: 5 kΩ ±50%	
			Signal: 15 uA (1 mA peak)	
		Direction switches	30 Vdc/2 mA	
		Working angle	±42°	
		Mechanical life	3 million cycles	
		Ingress protection (IP) rating	IP 43	
		Operating temperature	-30°C to 60°C (-22°F to 140°F)	

Joystick functions

Name	View	Description	Data	Code number
Roller—3mm (use only on the grip)		Action	Spring return to neutral	11145231—U 11089719—Q
		Output	Maximum voltage: 30 Vdc	
			Proportional signal: 25% - 50% - 75%	
			Impedance: 5 kΩ ±50%	
			Signal: 15 uA (1mA peak)	
		Direction switches	30 Vdc/2 mA	
		Working angle	±42°	
		Mechanical life	3 million cycles	
		Ingress protection (IP) rating	IP 43	
		Operating temperature	-30°C to 60°C (-22°F to 140°F)	

Name	View	Description	Data	Code number
Roller—proportional		Action	Proportional spring return to center ±40˚ mechanical travel	11174764—V
		Sensing	Hall effect	
		CAN electrical output	±0 to 1000 counts from center	
		Analog electrical output	0.5 to 4.5 Vdc (2.5 Vdc center)	
		Mechanical life	3 million cycles	
		Ingress protection (IP) rating	Electrical shield IP 66	
		Operating temperature	-30°C to 60°C (-22°F to 140°F)	

FNR

Name	View	Description	Data	Code number
Black		Action	3-position maintained	162B3030—F
		Type	Single pole, NC - NO - NC	
		Contact rating	30 Vdc/50 mA	
		Connection in base	Use 2 functions	
		Mechanical life	1 million cycles	
		Ingress protection, IP rating	IP 40	
		Operating temperature	-30°C to 60°C (-22°F to 140°F)	

Name	View	Description	Data	Code number
Red		Action	3-position maintained	11096614—K
		Type	Single pole, NC - NO - NC	
		Contact rating	30 Vdc/50 mA	
		Connection in base	Use 2 functions	
		Mechanical life	1 million cycles	
		Ingress protection, IP rating	IP 54	
		Operating temperature	-30°C to 60°C (-22°F to 140°F)	

Joystick functions

Name	View	Description	Data	Code number
Slider		Action	3-position maintained	11050323—J
		Power supply	5 Vdc to 30 Vdc	
		Contact rating	5K ohm	
		Connection in base	Use 2 functions	
		Mechanical life	1 million cycles	
		Ingress protection, IP rating	IP 66	
		Operating temperature	-40°C to 85°C (-40°F to 185°F)	

Toggle switch

Name	View	Description	Data	Code number
Rocker		Action	2-position maintained	11043530—T
		Type	Single pole, NO and NC output	
		Contact rating	30 Vdc/50 mA	
		Connection in base	Use 2 functions	
		Mechanical life	1 million cycles	
		Ingress protection, IP rating	IP 40	
		Operating temperature	-30°C to 60°C (-22°F to 140°F)	

Operator Presence switch

Name	View	Description	Data	Code number
Square push button		Action	Momentary	162B3020—D
		Type	Single pole, NO	
		Contact rating	30 Vdc, 50 mA	
		Connection in base	Use 1 function	
		Mechanical life	1 million cycles	
		Ingress protection, IP rating	IP 40	
		Operating temperature	-20° C to 55° C (-4° F to to 67° F)	

Name	View	Description	Data	Code number
Operator Presence switch		Action	Momentary	11169098 - O
		Type	Single pole, NO	
		Contact rating	10 mA, 12 Vdc resistive	
		Connection in base	Use 1 function	
		Mechanical life	1 million cycles	
		Ingress protection, IP rating	IP 66	
		Operating temperature	-40° C to +85° C (-40° F to 185° F)	

Connector options and cabling

Order separately from joystick.

One 6 pin connector

Cabling and pin location: One 6 pin DEUTSCH DTM04 connector

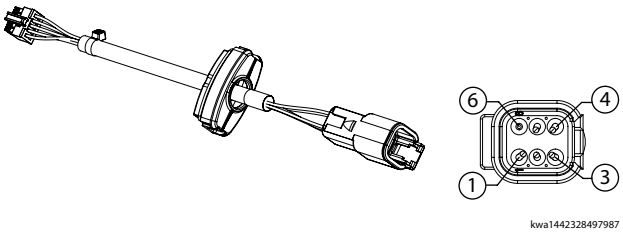

One 6 pin pinout

Wire color	DEUTSCH DTM04 6 pin	Function
White	1	Ground
Brown	2	Power
Green	3	CAN high
Yellow	4	CAN low
Grey	5	CAN shield
NC	6	NC

Two 6 pin connectors

Cabling and pin location: Two 6 pin DEUTSCH DTM04 connectors

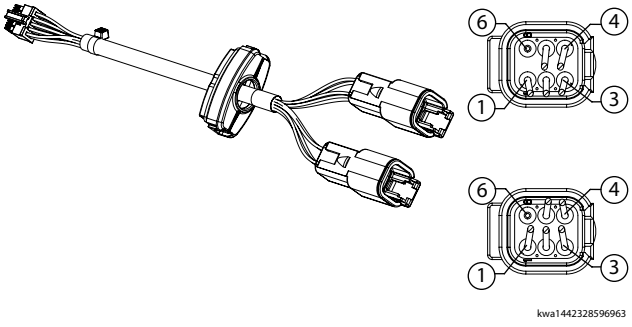

Two 6 pin pinout

Wire color	DEUTSCH DTM04 6 pin	DEUTSCH DTM04 6 pin	Function
White	1		Ground
Brown	2		Power
Green	3		CAN high
Yellow	4		CAN low
Grey	5		CAN shield
NC	6		NC
Pink		1	Ground
Blue		2	Power
Red		3	CAN high
Black		4	CAN low

Connector options and cabling

Two 6 pin pinout (continued)

Wire color	DEUTSCH DTM04 6 pin	DEUTSCH DTM04 6 pin	Function
Violet		5	CAN shield
NC		6	NC

One 12 pin connector

Cabling and pin location: One 12 pin DEUTSCH DTM04 connector; Code number: 10102025-B (16 to 20 AWG)

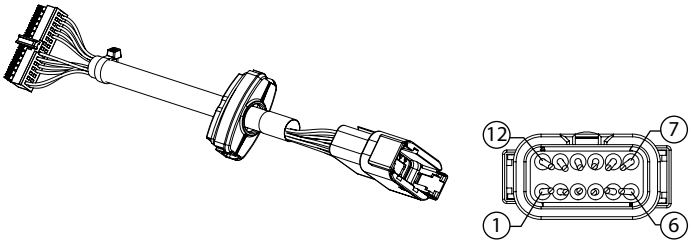

PVRE, 12 pin pinout

Wire color	DEUTSCH DTM04 12 pin	Function
White	1	Ground
Brown	2	Power
Yellow-Grey	3	CAN high
Pink-Green	4	CAN low
Grey	5	CAN shield
Violet	6	Proportional 1
Grey-Pink	7	Proportional 2
Red-Blue	8	Proportional 3
White-Red	9	Push 7
Brown-Red	10	Push 8
Green	11	PVE power (neutral switch)
Whte-Yellow	12	PVE power feedback

Connector options and cabling

Two 12 pin connectors

Cabling and pin location: Two 12 pin DEUTSCH DTM04 connectors; Code number: 10102023-K (16 to 20 AWG)

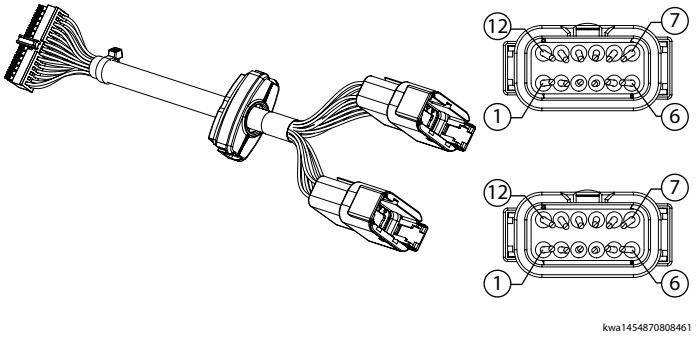

Standard, 12 pin A pinout

Wire color	DEUTSCH DTM04 12 PIN	Function
White	1	Ground
Brown	2	Power
Yellow-Grey	3	CAN high
Pink-Green	4	CAN low
Grey	5	CAN shield
Violet	6	Proportional 1
Grey-Pink	7	Proportional 2
Red-Blue	8	Proportional 3
White-Red	9	Push 7
Brown-Red	10	Push 8
Green	11	PVE power (neutral switch)
Whte-Yellow	12	PVE power feedback

Standard, 12 pin B pinout

Wire color	DEUTSCH DTM04 12 PIN	Function
White	1	Direction 1a
Brown	2	Direction 1b
Yellow-Grey	3	Direction 2a
Pink-Green	4	Direction 2b
Grey	5	Direction 3a
Violet	6	Direction 3b
Grey-Pink	7	Proportional 4
Red-Blue	8	Direction 4a
White-Red	9	Direction 4b
Brown-Red	10	Proportional 5
Green	11	Direction 5a
Whte-Yellow	12	Direction 5b

Connector options and cabling

Two 12 pin and one 6 pin connectors

Cabling and pin location: Two 12 pin and one 6 pin DEUTSCH DTM04 connectors; Code number: 11176538-K

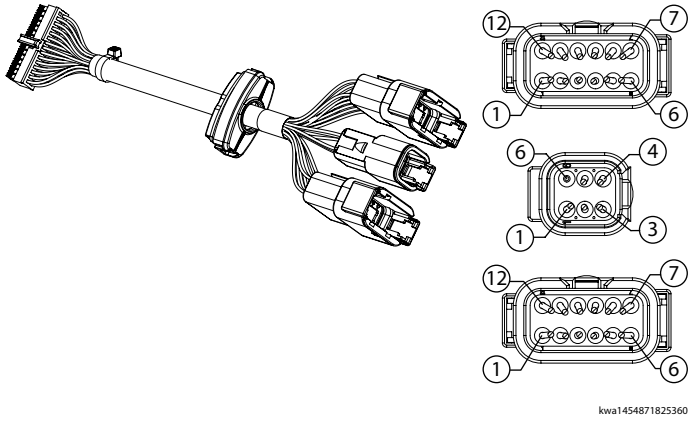

Extended, 12 pin A pinout

Wire color	DEUTSCH DTM04 12 PIN	Function
White	1	Ground
Brown	2	Power
Yellow-Grey	3	CAN high
Pink-Green	4	CAN low
Grey	5	CAN shield
Violet	6	Proportional 1
Grey-Pink	7	Proportional 2
Red-Blue	8	Proportional 3
White-Red	9	Push 7
Brown-Red	10	Push 8
Green	11	PVE power (neutral switch)
Whte-Yellow	12	PVE power feedback

Extended, 12 pin B pinout

Wire color	DEUTSCH DTM04 12 PIN	Function
White	1	Direction 1a
Brown	2	Direction 1b
Yellow-Grey	3	Direction 2a
Pink-Green	4	Direction 2b
Grey	5	Direction 3a
Violet	6	Direction 3b
Grey-Pink	7	Proportional 4
Red-Blue	8	Direction 4a
White-Red	9	Direction 4b
Brown-Red	10	Proportional 5
Green	11	Direction 5a
Whte-Yellow	12	Direction 5b

Connector options and cabling

Extended, 6 pin pinout

Wire color	DEUTSCH DTM04 6-pin	Function
Yellow-Brown	1	Power
White-Black	2	Push 9
Brown-Black	3	Push 10
Grey-Green	4	Push 11
Yellow	5	Push 12
NC	6	NC

One 25 and One 6 D-Sub pin connectors

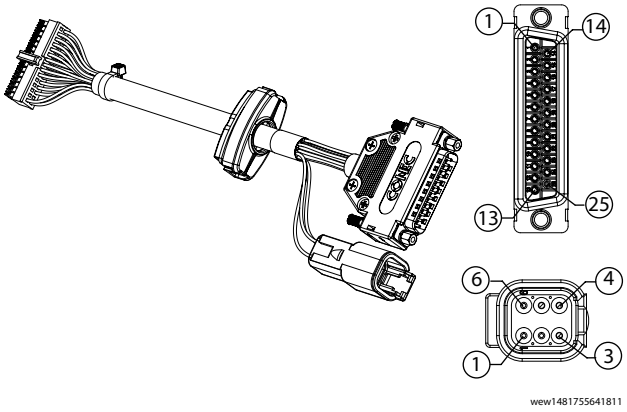

25 D-Sub pinout

Wire color	25 pin D-Sub	Function
Green	1	PVE power (neutral switch)
Green	2	PVE power (neutral switch)
Brown	3	Power
White-Blue	4	Direction 5a
Red-Blue	5	Proportional 3
White-Grey	6	Direction 3a/Push 1/*
Violet	7	Proportional 1
Grey-Pink	8	Proportional 2
Red	9	Direction 2a (Y Dir A)
White-Yellow	10	PVE Power feedback
Blue	11	Direction 1b (X Dir B)
Brown-Red	12	Push 8
White-Red	13	Push 7
Green	14	PVE power (neutral switch)
Brown	15	Power
Yellow-Brown	16	Power
White-Grey	17	Direction 5b
White-Green	18	Proportional 4
Grey-Brown	19	Direction 3b/Push 2/*
White-Pink	20	Direction 4a/Push 3/*
Pink-Brown	21	Direction 4a/Push 4/*

Connector options and cabling

25 D-Sub pinout (continued)

Wire color	25 pin D-Sub	Function
White	22	Ground
Black	23	Direction 2b (Y Dir B)
Pink	24	Direction 1a (X Dir A)
NA	25	NC

6 pin D-Sub pinout

Wire color	DEUTSCH DTM04 6-pin	Function
White	1	Ground
Brown	2	Power
Yellow-grey	3	CAN high
Pink-green	4	CAN low
Grey	5	CAN shield
NC	6	NC

Mating connectors bag assemblies

(must be ordered separately from joystick)

Danfoss connector bag assemblies part numbers

Description	Danfoss part number
One 6 pin DEUTSCH connector	10101551
Two 6 pin DEUTSCH connectors	11177980
One 12 pin DEUTSCH connector (GRY)	10100944
Two 12 pin DEUTSCH connectors (GRY/BLK)	10100945
Two 12 pin and One 6 pin DEUTSCH connectors (GRY/BLK)	11176538

DEUTSCH mating connector bag assemblies contents

Description	6 pin module	12 pin module (GRY)	12 pin module (BLK)
Crimp tool	HDT-48-00	HDT-48-00	HDT-48-00
Contacts	0462-201-2031	0462-201-2031	0462-201-2031
Connector plug	DTM06-6S,GRY	DTMO6-12SA, GRY	DTMO6-12SB, BLK
Wedge	WM-6S	WM-12S	WM-12S
Strip length	3.96 to 5.54 mm (0.156 to 0.218 in)	3.96 to 5.54 mm (0.156 to 0.218 in)	3.96 to 5.54 mm (0.156 to 0.218 in)
Rear seal maximum insulation OD	3.05 mm (0.120 in)	3.05 mm (0.120 in)	3.05 mm (0.120 in)
Sealing plugs	0413-204-2005	0413-204-2005	0413-204-2005

Connector options and cabling

Cable assemblies

All cable assemblies for JS1-H are 185 mm (7.30 in) from the bottom of the case to the end of the connector.

JS1-H cable length

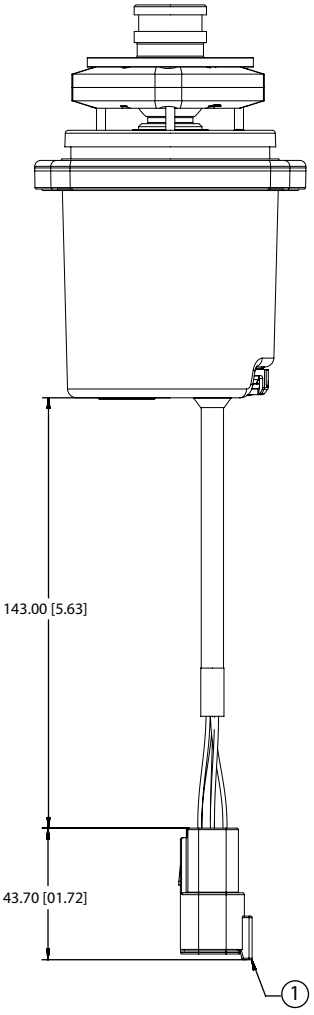

1. DEUTSCH DTM04 receptacle

Compatible mating cables available for different applications

Code no. 162B....	Length mm [in]	Plug type	Type
6013	4000 [157]	Leads	Vertical SUB-D
6014	4000 [157]	Leads	Horizontal Sub-D
6015	500 [19]	Clipper	–
6016	230 [9]	TRIM TRIO	–
6017	230 [9]	Tabs	PVRE compatibility

Connector options and cabling

Cable assemblies - first is vertical view, followed by horizontal views

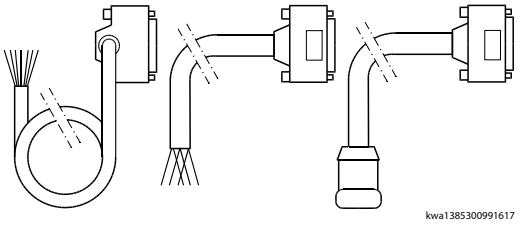

Product configuration model code

The product configuration model code specifies particular features when ordering the . The model code begins with the product family name and the remaining fields are filled in to configure the product with the desired features.

JS1-H base and grip model code fields

The configuration model code contains information relating to both base and grip features.

JS1-H Joystick product configuration model code

	Base									Grip																Common		
A	**B**		**C**			**D**	**E**			**F1**	**F2**		**G**	**H1**	**H2**	**H3**	**H4**	**H5**	**H6**	**H7**	**H8**	**H9**	**H10**	**H11**	**H12**	**J1**	**J2**	**J3**	**J4**	**K**	
JS1H																															

Product configuration model code

Base model code

JS1-H Joystick product configuration model code

	Base					Grip																Common		
A	**B**	**C**	**D**	**E**	**F1**	**F2**		**G**	**H1**	**H2**	**H3**	**H4**	**H5**	**H6**	**H7**	**H8**	**H9**	**H10**	**H11**	**H12**	**J1**	**J2**	**J3**	**J4**	**K**
JS1H																									

A—Product family

Code	Description
JS1H	Family name

B—Operational axis

Code	Description
NN	No base
XY	Bi-directional: X and Y-axis
NY	Uni-directional: Only Y-axis
XN	Uni-directional: Only X-axis
NF	Single Axis: Frictional Y-axis

C—Shaft position, sensing output

Code	Description
NNN	No base
CJP	CAN J1939 with potentiometer
CJH	CAN J1939 with Hall effect
CPP	CANopen with potentiometer
CPH	CANopen with Hall effect
PSP	Standard base with Potentiometer
PSH	Standards base with hall
PEP	Extended base with potentiometer
PEH	Extended base with hall

D—Centering spring

Code	Description
N	No base
S	Standard spring force
H	Heavy spring force
A	Friction 0.8 Nm, Center 1.5 Nm
B	Friction 0.8 Nm, Center 2.0 Nm
C	Friction 1.6 Nm, Center 3.0 Nm

E—CAN

Code	Description
NNN	Analog (base and/or grip)
C33	Note ID 33, 250kbs
C34	Note ID 34, 250kbs

Product configuration model code

Code	Description
C35	Note ID 35, 250kbs
C36	Note ID 36, 250kbs
D90	Node ID 90, 500kbs
D93	Node ID 93, 500kbs
D96	Node ID 96, 500kbs
D9C	Node ID 9C, 500kbs
C90	Node ID 90, 250kbs
C93	Node ID 93, 250kbs
C96	Node ID 96, 250kbs
C9C	Node ID 9C, 250kbs
B10	Node ID 10, 125kbs
B13	Node ID 13, 125kbs
B16	Node ID 16, 125kbs
B1C	Node ID 1C, 125kbs
C71	Replace of NodeID: N71
C72	Replace of NodeID: N72

F1—Mounting

Code	Description
N	No base
T	Top mount

Product configuration model code

Grip model code

JS1-H Joystick product configuration model code

	Base							Grip																	Common			
A	**B**	**C**			**D**	**E**		**F1**	**F2**			**G**	**H1**	**H2**	**H3**	**H4**	**H5**	**H6**	**H7**	**H8**	**H9**	**H10**	**H11**	**H12**	**J1**	**J2**	**J3**	**J4**	**K**
JS1H																													

F2—Grip type

Code	Description
NNN	No grip
HR1	Horizontal grip
HP1	IP 66 version of HR1
ST2	Medium straight grip
SP2	IP 66 version of ST2
PR2	Prof1 version 2 grip
PP2	IP 66 version of PR2
ST7	Large straight grip
SP7	IP 66 version of ST7
PR7	Professional JS7000 grip
PP7	IP 66 version PR7

G—Left or right hand or ambidextrous

Code	Description
N	No grip
L	Left hand grip
R	Right hand grip
U	Ambidextrous grip (accommodates left and right hand)

H1—Defining of front plate

Code	Description
N	No button
Y	Yellow push button
B	Black push button
G	Grey push button
R	Red push button
1	Yellow push button - Dome Shape
2	Black push button - Dome Shape
4	Red push button - Dome Shape
P	Roller, [position 1-2]
S	Roller v-Lead, [position 1-2]
V	IP 66 Roller, [position 1-2]
F	FNR [Black], [position 1-2]
T	Toggle [Rocker], [position 1-2]

Product configuration model code

H1—Defining of front plate (continued)

Code	Description
K	FNR [Red], [position 1-2]
+	Customer Refer to ST2 *Faceplate options* on page 14 and ST7 *Faceplate options* on page 21

H2—Defining of front plate

Code	Description
N	No button
Y	Yellow push button
B	Black push button
G	Grey push button
R	Red push button
1	Yellow push button - Dome Shape
2	Black push button - Dome Shape
4	Red push button - Dome Shape
P	Roller, [position 2-3]
S	Roller v-Lead, [position 2-3]
V	IP 66 Roller, [position 2-3]
F	FNR [Black], [position 2-3]
T	Toggle [Black], [position 2-3]
K	FNR [Red], [position 2-3]
+	Customer Refer to ST2 *Faceplate options* on page 14 and ST7 *Faceplate options* on page 21

H3—Defining of front plate

Code	Description
N	No button
Y	Yellow push button
B	Black push button
G	Grey push button
R	Red push button
1	Yellow push button - Dome Shape
2	Black push button - Dome Shape
4	Red push button - Dome Shape
P	Roller,[position 3-4]
S	Roller v-Lead, [position 3-4]
V	IP 66 Roller, [position 3-4]
F	FNR [Black], [position 3-4]
T	Toggle [Black], [position 3-4]
K	FNR [Red], [position 3-4]
+	Customer Refer to ST2 *Faceplate options* on page 14 and ST7 *Faceplate options* on page 21

Product configuration model code

H4—Defining of front plate

Code	Description
N	No button
Y	Yellow push button
B	Black push button
G	Grey push button
R	Red push button
1	Yellow push button - Dome Shape
2	Black push button - Dome Shape
4	Red push button - Dome Shape
P	Roller, [position 4-1]
S	Roller v-Lead, [position 4-1]
V	IP 66 Roller, [position 4-1]
F	FNR [Black], [position 4-1]
T	Toggle [Black], [position 4-1]
K	FNR [Red], [position 4-1]
J	FNR [Slider], [position 4-1]
+	Customer Refer to ST2 *Faceplate options* on page 14 and ST7 *Faceplate options* on page 21

H5—Defining of front plate

Code	Description
N	No button
Y	Yellow push button
B	Black push button
G	Grey push button
R	Red push button
1	Yellow push button - Dome Shape
2	Black push button - Dome Shape
4	Red push button - Dome Shape
+	Customer Refer to ST2 *Faceplate options* on page 14 and ST7 *Faceplate options* on page 21

H6—Defining grip side

Code	Description
N	No button
Y	Yellow push button
B	Black push button
G	Grey push button
R	Red push button
1	Yellow push button - Dome Shape
2	Black push button - Dome Shape
4	Red push button - Dome Shape
U	Roller, [position 6-12]

Product configuration model code

H6—Defining grip side (continued)

Code	Description
Q	Roller v-Lead, [position 6-12]
V	IP 66 Roller, [position 6-12]
F	FNR [Black], [position 6-12]
T	Toggle [Black], [position 6-12]
K	FNR [Red], [position 6-12]
+	Customer Refer to ST2 *Faceplate options* on page 14 and ST7 *Faceplate options* on page 21

H7—Defining grip side

Code	Description
N	No button
Y	Yellow push button
B	Black push button
G	Grey push button
R	Red push button
1	Yellow push button - Dome Shape
2	Black push button - Dome Shape
4	Red push button - Dome Shape
D	Square Push Button - Operator Presence Switch
O	Operator Presence Switch
U	Roller, [position 7-8]
Q	Roller v-Lead, [position 7-8]
V	IP 66 Roller, [position 7-8]

H8—Defining grip side

Code	Description
N	No button
Y	Yellow push button
B	Black push button
G	Grey push button
R	Red push button
1	Yellow push button - Dome Shape
2	Black push button - Dome Shape
4	Red push button - Dome Shape
D	Square push button - Operator Presence Switch

H9—Defining of back side

Code	Description
N	No button
Y	Yellow push button
B	Black push button
G	Grey push button

Product configuration model code

H9—Defining of back side (continued)

Code	Description
R	Red push button
1	Yellow push button - Dome Shape
2	Black push button - Dome Shape
4	Red push button - Dome Shape
K	FNR [Red], [position 9-10]

H10—Defining grip side

Code	Description
N	No button
Y	Yellow push button
B	Black push button
G	Grey push button
R	Red push button
1	Yellow push button - Dome Shape
2	Black push button - Dome Shape
4	Red push button - Dome Shape
F	FNR [Black], [position 10-11]

H11—Defining grip side

Code	Description
N	No button
Y	Yellow push button
B	Black push button
G	Grey push button
R	Red push button
1	Yellow push button - Dome Shape
2	Black push button - Dome Shape
4	Red push button - Dome Shape

H12—Defining grip side

Code	Description
N	No button
Y	Yellow push button
B	Black push button
G	Grey push button
R	Red push button
1	Yellow push button - Dome Shape
2	Black push button - Dome Shape
4	Red push button - Dome Shape
K	FNR [Red], [position 12]

Product configuration model code

J1—Grip color

Code	Description
N	No grip
G	HR1 and PR7 grip
B	ST2, ST7 and PR2 grip

J2—Color band

Code	Description
N	No color band
Y	Yellow color band
B	Black color band
R	Red color band

Product configuration model code

Common model code

JS1-H Joystick product configuration model code

	Base							Grip																Common		
A	**B**	**C**		**D**	**E**		**F1**	**F2**		**G**	**H1**	**H2**	**H3**	**H4**	**H5**	**H6**	**H7**	**H8**	**H9**	**H10**	**H11**	**H12**	**J1**	**J2**	**J3**	**J4**	**K**
JS1H																										

J3—Cable

Code	Description
N	No cable
G	CAN cable with 1 x 6 pin DEUTSCH connector
H	CAN cable with 2 x 6 pin DEUTSCH connector
Q	CAN JS7000 18 pin
L	PVE cable with 12+12+6 pin DEUTSCH
K	PVE cable with 12+12 pin DEUTSCH
T	PVE cable with SUB-D 25 + 6 pin DEUTSCH

J4—Kit and extension cable

Code	Description
N	No kit
B	Adapter Plate for JS7000
C	JS6000 bottom mount adapter

K—Software or settings

Code	Description
NN	No software or settings

Product installation

Joystick safety critical functions

For a system to operate safely it must be able to differentiate between commanded and uncommanded inputs. Take steps to detect and manage joystick and system failures that may cause an erroneous output.

For safety critical functions Danfoss recommends you use an independent momentary action system enable switch. You can incorporate this switch into the joystick as an operator presence switch or can be a separate foot or hand operated momentary switch. Disable all joystick functions that the joystick controls when this switch is released.

Ensure the control system looks for the appropriate system enable switch input before the joystick is displaced from its neutral position. Enable functions only after receiving this input.

Applications using CAN joysticks should continuously monitor for the presence of the CAN messages on periodic basis. Messages are to be checked frequently enough for the system or operator to react if the CAN messages lose priority or are no longer received.

Machine wiring guidelines

- Protect wires from mechanical abuse, run wires in flexible metal or plastic conduits.
- Use 85° C (185° F) wire with abrasion resistant insulation and 105° C (221° F) wire should be considered near hot surfaces.
- Use a wire size that is appropriate for the module connector.
- Separate high current wires such as solenoids, lights, alternators or fuel pumps from sensor and other noise-sensitive input wires.
- Run wires along the inside of, or close to, metal machine surfaces where possible, this simulates a shield which will minimize the effects of EMI/RFI radiation.
- Do not run wires near sharp metal corners, consider running wires through a grommet when rounding a corner.
- Do not run wires near hot machine members.
- Provide strain relief for all wires.
- Avoid running wires near moving or vibrating components.
- Avoid long, unsupported wire spans.
- Ground electronic modules to a dedicated conductor of sufficient size that is connected to the battery (-).
- Power the sensors and valve drive circuits by their dedicated wired power sources and ground returns.
- Twist sensor lines about one turn every 10 cm (4 in).
- Use wire harness anchors that will allow wires to float with respect to the machine rather than rigid anchors.

Caution

Unused pins on mating connectors may cause intermittent product performance or premature failure. Plug all pins on mating connectors.

Warning

Unintended movement of the machine or mechanism may cause injury to the technician or bystanders. Improperly protected power input lines against over current conditions may cause damage to the hardware. Properly protect all power input lines against over-current conditions.

Appendix: CAN J1939 protocol

Joysticks CAN J1939 protocol option on page 62
SAE J1939 basic joystick message on page 63
SAE J1939 extended joystick message on page 68
SAE J1939 error (DM1) messages on page 70

Appendix: CAN J1939 protocol

Joysticks CAN J1939 protocol option

Joysticks CAN J1939 protocol option designated as model code CAN and broadcast two J1939 messages to communicate the device information. The two messages are:

- Basic Joystick Message 1 (BJM1)
- Extended Joystick Message (EJM1)

Appendix: CAN J1939 protocol

SAE J1939 basic joystick message

The JS1-H joystick uses the SAE J1939 basic joystick message to transfer information about the measured status of the X and Y-axis of a joystick, the state of the switches on the joystick grip, and the state of external to the joystick digital inputs.

Basic joystick message structure

Basic message number	Priority	Base parameter Group number (PGN)		Protocol Data Unit (PDU) format		PDU specific		Source address		Data field
		Dec	hex	Dec	hex	Dec	hex	Dec	hex	
1	3	64982	FDD6	253	FD	214	D6	*	*	8 bytes
3	3		FDDA		FD		DA	*	*	8 bytes

* Depends on position specified in master model code.

- Message transmission rate: 20 ms
- CAN bus baud rate: 250kbps

The resulting SAE J1939 basic joystick message PGN on the CAN bus is:

0xCFDD6 * * or 0xCFDDA * *

* = joystick source address (hex)

Data field

The data field contains the joystick's output information. SAE J1939 data fields contain 8 bytes of data.

Information in the data field

Byte#	0								1								2 and so on							
Bit#	1	2	3	4	5	6	7	8	1	2	3	4	5	6	7	8	1	2	3	4	5	6	7	8

Appendix: CAN J1939 protocol

Basic joystick message data field descriptions

Basic joystick message parameters and data field locations

Start position (byte/bit)	Length (bits)	Parameter name
0/1	2	Joystick X-axis neutral position status
0/3	2	Joystick X-axis lever left negative position status
0/5	2	Joystick X-axis lever right positive position status
0/7 through 1/1-8	10	Joystick X-axis position (Byte 0 Bit 7 is LSB. Byte 1 Bit 8 is MSB)
2/1	2	Joystick Y-axis neutral position status
2/3	2	Joystick Y-axis lever back negative position
2/5	2	Joystick Y-axis lever forward positive position
2/7 through 3/1-8	10	Joystick Y-axis position (Byte 2 Bit 7 is LSB. Byte 3 Bit 8 is MSB)
4/5	2	Joystick Y-axis detent position status
4/7	2	Joystick X-axis detent position status
5/1	2	Grip button 4 pressed status
5/3	2	Grip button 3 pressed status
5/5	2	Grip button 2 pressed status
5/7	2	Grip button 1 pressed status
6/1	2	Grip button 8 pressed status
6/3	2	Grip button 7 pressed status
6/5	2	Grip button 6 pressed status
6/7	2	Grip button 5 pressed status
7/1	2	Grip button 12 pressed status
7/3	2	Grip button 11 pressed status
7/5	2	Grip button 10 presses status
7/7	2	Grip button 9 pressed status

Data field example 1

Byte	0							
Bit	8	7	6	5	4	3	2	1
	The 2 LSB* of X-axis position status		X-axis lever right positive status		X-axis lever left negative position status		X-axis neutral position status	

* Least Significant Bit.

Data field example 2

Byte	1							
Bit	8	7	6	5	4	3	2	1
	MSB* X-axis position							

* Most Significant Bit.

Appendix: CAN J1939 protocol

Data field example 3

Byte	2							
Bit	8	7	6	5	4	3	2	1
	The 2 LSB* of X-axis position status		X-axis lever forward positive status		Y-axis lever back negative position status		Y-axis neutral position status	

* Least Significant Bit.

Joystick X-axis neutral position status

Reports when the current joystick position is in the neutral position for the X-axis of travel.

Information in the data field

Bit status	Remarks
00	Not in neutral position
01	In neutral position
10	Error indicator
11	Not available

Joystick X-axis handle left negative position status

Reports when the current joystick position is on the negative travel side (back, left, counterclockwise, down) relative to the neutral position for the X-axis.

Information in the Data Field

Bit status	Remarks
00	Not on negative side of neutral
01	On negative side of neutral
10	Error indicator
11	Not available

Joystick X-axis handle right positive position status

Reports when the current joystick position is on the positive travel side (forward, right, clockwise, up) relative to the neutral position for the X-axis.

Information in the data field

Bit status	Remarks
00	Not on positive side of neutral
01	On positive side of neutral
10	Error indicator
11	Not available

Joystick X-axis position status

This is the position of the joystick in the relative motion of travel from the neutral position. The position value of 0 is always neutral. The output range of the joystick handle at the end of travel is factory set according to the option specified in the electrical interface options section of the master model code.

The master model code specifies that the full-scale output at the end of each linear zone will be 1000 counts.

Appendix: CAN J1939 protocol

Warning

Potential uncommanded machine movement. Per the SAE J1939-71 standard:

- if the joystick internal diagnostics detect a shaft position measurement error, the joystick output will be set to a value of 1022 counts regardless of shaft position.
- if a specific joystick axis is not available, the basic joystick message for the unavailable axis will indicate an output value of 1023 counts.

Ensure application software recognizes these conditions to avoid the possibility of unintended machine motion.

Joystick Y-axis neutral position status

Reports when the current joystick position is in the neutral position for the Y-axis of travel.

Information in the data field

Bit status	Remarks
00	Not in neutral position
01	In neutral position
10	Error indicator
11	Not available

Joystick Y-axis handle back negative position status

Reports when the current joystick position is on the negative travel side (back, left, counterclockwise, down) relative to the neutral position for the Y-axis.

Information in the data field

Bit status	Remarks
00	Not on negative side of neutral
01	On negative side of neutral
10	Error indicator
11	Not available

Joystick Y-axis handle forward positive position status

Reports when the current joystick position is on the positive travel side (forward, right, clockwise, up) relative to the neutral position for the Y-axis.

Information in the data field

Bit status	Remarks
00	Not on positive side of neutral
01	On positive side of neutral
10	Error indicator
11	Not available

Joystick Y-axis position status

This is the position of the joystick in the relative motion of travel from the neutral position. The position value of 0 is always neutral. The output range of the joystick handle at the end of travel is factory set according to the option specified in the electrical interface options section of the master model code.

Appendix: CAN J1939 protocol

The master model code specifies that the full-scale output at the end of each linear zone will be 1000 counts.

Warning

Potential uncommanded machine movement. Per the SAE J1939-71 standard:

- if the joystick internal diagnostics detect a shaft position measurement error, the joystick output will be set to a value of 1022 counts regardless of shaft position.
- if a specific joystick axis is not available, the basic joystick message for the unavailable axis will indicate an output value of 1023 counts.

Ensure application software recognizes these conditions to avoid the possibility of unintended machine motion.

Joystick button 1-8 pressed status

Joystick button 1-8 pressed status

Bit status	Remarks
00	Button not pressed
01	Button pressed
10	Error indicator
11	Not available (no button installed)

Appendix: CAN J1939 protocol

SAE J1939 extended joystick message

The JS1-H joystick uses the SAE J1939 extended joystick message to transfer information about the measured status of up to 3 additional proportional input functions on the joystick grip, and external-to-the-joystick analog inputs. The joystick base X and Y-axis information is available in the basic joystick message.

Extended joystick message structure

Message number	Priority	Base PGN		PDU format		PDU specific		Source address		Data field
		Dec	hex	Dec	hex	Dec	hex	Dec	hex	
1	3	64983	FDD7	253	FD	215	D7	The source address depends on position specified in master model code.		8 bytes
3			FDDB		FD		DB	The source address depends on position specified in master model code.		8 bytes

Message transmission rate: 20 ms

CAN bus baud rate: 250kbps

The resulting SAE J1939 extended joystick message PGN on the CAN bus is:

0xCFDD7 * * or 0xCFDDB * *

* = joystick source address (hex)

Extended joystick message parameters and data field descriptions

Extended joystick message parameters and data field locations

Start position (Byte/Bit)	Length (Bits)	Parameter name
0/1	2	Grip X-axis neutral position status
0/3	2	Grip X-axis lever left negative position status
0/5	2	Grip X-axis lever right positive position status
0/7 through 1/1-8	10	Grip X-axis position
2/1	2	Grip Y-axis neutral position status
2/3	2	Grip Y-axis lever back negative position
2/5	2	Grip Y-axis lever forward positive position
2/7 through 3/1-8	10	Grip Y-axis position
6/5	2	Grip Y-axis detent position status-not available
6/7	2	Grip X-axis detent position status-not available

Data field descriptions and output ranges for extended joystick messages are similar to those for base X and Y-axis basic joystick messages.

Grip proportional input naming convention

Proportional input location	Extended joystick message designation
Horizontal orientation, top	X-axis
Horizontal orientation, bottom	Y-axis

Appendix: CAN J1939 protocol

Grip proportional input naming convention (continued)

Proportional input location	Extended joystick message designation
Vertical orientation, left side	X-axis
Vertical orientation, right side	Y-axis

Appendix: CAN J1939 protocol

SAE J1939 error (DM1) messages

SAE J1939 DM1 error messages are supported by JS1-H software.

See the tables below for Suspect Parameter Number (SPN) and Failure Mode Identifier (FMI) information.

Failure: Voltage too high

Message	Axis	SPN	FMI
BJM1	X	2660	3
BJM1	Y	2661	3
BJM1	Grip X	2662	3
BJM1	Grip Y	2663	3
BJM1	Grip Theta	2664	3

Failure: Voltage too low

Message	Axis	SPN	FMI
BJM1	X	2660	4
BJM1	Y	2661	4
BJM1	Grip X	2662	4
BJM1	Grip Y	2663	4
BJM1	Grip Theta	2664	4

Failure: Input not calibrated

Message	Axis	SPN	FMI
BJM1	X	2660	13
BJM1	Y	2661	13
BJM1	Grip X	2662	13
BJM1	Grip Y	2663	13
BJM1	Grip Theta	2664	13

Failure: Redundant input failure

Message	Axis	SPN	FMI
BJM1	X	2660	14
BJM1	Y	2661	14
BJM1	Grip X	2662	14
BJM1	Grip Y	2663	14
BJM1	Grip Theta	2664	14

JS1-H joysticks do not support SAE J1939 dynamic addressing, since the joystick source addresses are hard-coded (static). However, JS1-H joysticks are compliant with SAE J1939 address claiming protocol (in the unlikely event another node on the SAE J1939 bus claims an identical source address to the JS1-H, the JS1-H may cease communication on the bus, depending on the message priority on the other node).

Appendix: CANopen protocol

CANopen Object Dictionary for JS1-H joysticks on page 72

Parameter/variable index on page 72

Error handling on page 83

Appendix: CANopen protocol

CANopen Object Dictionary for JS1-H joysticks

To access the CANopen Object Dictionary go to *http://www.powersolutions.danfoss.com/products/electronic-components/Joysticks/*, then under Download find CANopen EDS under the JS1-H.

In order to access an Entry within an Object, the Service Data Object (SDO) is used. The Initiate SDO Download/Upload protocol and the Upload SDO Segment protocol (used when data type is VISIBLE_STRING) are supported. Each Object has an Index and a Name. For each Entry within an Object there is a Sub-Index followed by a Name and a Description (if applicable).

The different Data types of an Entry can be as follows:

- U32 (UNSIGNED32), U16 (UNSIGNED16) or U8 (UNSIGNED8)
- S32 (INTEGER32), S16 (INTEGER16) or S8 (INTEGER8)
- STR (VISIBLE_STRING)
- NEUTRAL_STATE (2 bit state value)

The Access of an Entry can be as follows:

- ro (Read Only)
- rw (Read Write)
- wo (Write Only)
- const

The minimum and maximum value of an Entry is also specified where applicable. This does not mean that there is a check within the joystick that the written value is within the value range, for example, the User is responsible to write a value within the value range. It should also be observed that the Default value of an Entry may not be true for all applications. The Unit/Scale gives either the unit of the value and/or the scaling used where applicable.

Parameter/variable index

40h Device type

Sub-index	Name	Description	Data type	Access	Minimum	Maximum	Default	Unit/Scale
0	NEUTRAL_STATE	2-bit Proportional Axis (Neutral State) data type. 0x00 = Neutral 0x01 = Out Of Neutral 0x02 = Error 0x03 = Not Available	U32	ro	-	-	-	-

1000h Device type

Sub-index	Name	Description	Data type	Access	Minimum	Maximum	Default	Unit/Scale
0	Device Type	01050191h: Joystick without digital outputs	U32	const	-	-	See description	-

Appendix: CANopen protocol

1001h Device register

Sub-index	Name	Description	Data type	Access	Minimum	Maximum	Default	Unit/Scale
0	Error Register	Bit 0 (Generic): 1 in case of an unknown error Bit 1 (Current): Always zero Bit 2 (Voltage): 1 in case of a voltage to high or low Bit 3 (Temperature): Always zero Bit 4 (Communication Error): Always zero Bit 5 (Device Profile Specific): Always zero Bit 6 (Reserved): Always zero Bit 7 (Manufacture-Specific): 1 in case of an IIC grip communication error, or a calibration error	U8	ro	-	-	-	-

1003h Error log: Code

Sub-index	Name	Description	Data type	Access	Minimum	Maximum	Default	Unit/Scale
0h	Log size	The entry at sub-index 0 contains the number of actual errors that are recorded starting at sub-index 1. Writing a zero to sub-index 0 clears the error log. Writing a value other than zero to sub-index 0 will result in an abort message.	U8	rw	0	24	-	-
1h	Error 1 Code	Every new error is stored at sub-index 1, the older ones move down the list.	U32	ro	0	2^{32}-1	-	-
2h	Error 2 Code		U32	ro	0	2^{32}-1	-	-
3h	Error 3 Code		U32	ro	0	2^{32}-1	-	-
4h	Error 4 Code		U32	ro	0	2^{32}-1	-	-
5h	Error 5 Code		U32	ro	0	2^{32}-1	-	-
6h	Error 6 Code		U32	ro	0	2^{32}-1	-	-
7h	Error 7 Code		U32	ro	0	2^{32}-1	-	-
8h	Error 8 Code		U32	ro	0	2^{32}-1	-	-
9h	Error 9 Code		U32	ro	0	2^{32}-1	-	-
Ah	Error 10 Code		U32	ro	0	2^{32}-1	-	-
Bh	Error 11 Code		U32	ro	0	2^{32}-1	-	-
Ch	Error 12 Code		U32	ro	0	2^{32}-1	-	-
Dh	Error 13 Code		U32	ro	0	2^{32}-1	-	-
Eh	Error 14 Code		U32	ro	0	2^{32}-1	-	-
Fh	Error 15 Code		U32	ro	0	2^{32}-1	-	-
10h	Error 16 Code		U32	ro	0	2^{32}-1	-	-
11h	Error 17 Code		U32	ro	0	2^{32}-1	-	-
12h	Error 18 Code		U32	ro	0	2^{32}-1	-	-
13h	Error 19 Code		U32	ro	0	2^{32}-1	-	-
14h	Error 20 Code		U32	ro	0	2^{32}-1	-	-

Appendix: CANopen protocol

1003h Error log: Code (continued)

Sub-index	Name	Description	Data type	Access	Minimum	Maximum	Default	Unit/Scale
15h	Error 21 Code		U32	ro	0	2^{32}-1	-	-
16h	Error 22 Code		U32	ro	0	2^{32}-1	-	-
17h	Error 23 Code		U32	ro	0	2^{32}-1	-	-
18h	Error 24 Code		U32	ro	0	2^{32}-1	-	-

1008h Manufacturer device name

Sub-index	Name	Description	Data type	Access	Minimum	Maximum	Default	Unit/Scale
0	Manufacturer Device Name	JS1-H device family name. Returns "JOYSTICK"	STR	Const	-	-	-	-

1009h Manufacturer hardware version

Sub-index	Name	Description	Data type	Access	Minimum	Maximum	Default	Unit/Scale
0	Manufacturer Hardware Version	Hardware part number. The part number will be different for joystick models.	STR	Const	-	-	-	-

100Ah Manufacturer software version

Sub-index	Name	Description	Data type	Access	Minimum	Maximum	Default	Unit/Scale
0	Manufacturer Software Version	Software part number and version.	STR	Const	-	-	-	-

100Bh CAN Node ID

Sub-index	Name	Description	Data type	Access	Minimum	Maximum	Default	Unit/Scale
0	CAN Node ID	Changes CAN Node ID, requires repower.	U8	rw	1	127	-	-

1014h COB-ID EMCY message

Sub-index	Name	Description	Data type	Access	Minimum	Maximum	Default	Unit/Scale
0	COB-ID EMCY Message	Defines the COB-ID of the EMCY object.	U32	ro	0	2^{32}-1	80h+ Node ID	-

1017h Producer heartbeat time

Sub-index	Name	Description	Data type	Access	Minimum	Maximum	Default	Unit/Scale
0	Producer	Time in milliseconds on how often the Joystick will transmit a heartbeat. A value of 0 will disable the heartbeat. It requires a reboot for the value to take effect after change.	U16	rw	0	2^{32}-1	20	-

Appendix: CANopen protocol

1018h Identity object

Sub-index	Name	Description	Data type	Access	Minimum	Maximum	Default	Unit/Scale
0	Number of entries		U8	const	-	-	4	-
1	Vendor Id	Returns the Vendor Id for JS1-H = 19h.	U32	const	-	-	19h	-
2	Product Code		U32	const	-	-	1h	-
3	Revision Number		U32	const	-	-	10001h	-
4	Serial Number	Device serial number.	U32	const	-	-	-	-

1200h Server SD01 parameters

Sub-index	Name	Description	Data type	Access	Minimum	Maximum	Default	Unit/Scale
0	Number of entries		U8	const	-	-	2	-
1	COB-ID used by SDO 1 rx		U32	ro	0	2^{32}-1	600h+ Node Id	-
2	COB-ID used by SDO 1 tx		U32	ro	0	2^{32}-1	580h+ Node Id	-

1800h Transmit PD01 communication parameters

Sub-index	Name	Description	Data type	Access	Minimum	Maximum	Default	Unit/Scale
0	Number of entries		U8	const	-	-	5	-
1	COB-ID used by PDO1 Tx		U32	ro	0	2^{32}-1	180h+ Node Id + 2^{30}	-
2	Transmission Type	FEh: event driven (manufacturer specific)	U8	ro	0	255	FEh	-
3	Inhibit Time	The time is the minimum interval for PDO transmission. The value is defined as multiple of 100 microseconds. The value of 0 shall disable the inhibit time.	U16	rw	0	2^{16}-1	0	ms/10
4	Reserved	Not implemented; a read or write access results in an SDO abort with abort code 06090011h.	-	-	-	-	-	-
5	Event Time	The time is the maximum interval for PDO transmission. The value of 0 shall disable the event timer, resulting in the PDO not being transmitted.	U16	rw	0	2^{16}-1	20	ms

Appendix: CANopen protocol

1801h Transmit PDO2 communication parameters

Sub-index	Name	Description	Data type	Access	Minimum	Maximum	Default	Unit/Scale
0	Number of entries		U8	const	-	-	5	-
1	COB-ID used by PDO2 Tx		U32	ro	0	2^{32}-1	280h + Node Id + 2^{30}	-
2	Transmission Type	FEh: event driven (manufacturer specific)	U8	ro	0	255	FEh	-
3	Inhibit Time	The time is the minimum interval for PDO transmission. The value is defined as multiple of 100 microseconds. The value of 0 shall disable the inhibit time.	U16	rw	0	2^{16}-1	0	ms/10
4	Reserved	Not implemented; a read or write access results in an SDO abort with abort code 06090011h.	-	-	-	-	-	-
5	Event Timer	The time is the maximum interval for PDO transmission. The value of 0 shall disable the event timer, resulting in the PDO not being transmitted.	U16	rw	0	2^{16}-1	20	ms

1802h Transmit PDO3 communication parameters

Sub-index	Name	Description	Data type	Access	Minimum	Maximum	Default	Unit/Scale
0	Number of entries		U8	const	-	-	5	-
1	COB-ID used by PDO3 Tx		U32	ro	0	2^{32}-1	380h + Node Id + 2^{30}	-
2	Transmission Type	FEh: event driven (manufacturer specific)	U8	ro	0	255	FEh	-
3	Inhibit Time	The time is the minimum interval for PDO transmission. The value is defined as multiple of 100 microseconds. The value of 0 shall disable the inhibit time.	U16	rw	0	2^{16}-1	0	ms/10
4	Reserved	Not implemented; a read or write access results in an SDO abort with abort code 06090011h.	-	-	-	-	-	-
5	Event Timer	The time is the maximum interval for PDO transmission. The value of 0 shall disable the event timer, resulting in the PDO not being transmitted.	U16	rw	0	2^{16}-1	20	ms

Appendix: CANopen protocol

1A00h Transmit PD01 map parameters

Sub-index	Name	Description	Data type	Access	Minimum	Maximum	Default	Unit/Scale
0	Number of Mapped Applications Objects in PDO1Tx		U8	ro	0	49	49	-
1	Mapping for Proportional Memory Freeze Status	Example: 6000h:1 gives value=60000108h where index=6000h sub-index=01h data type=08h (8bits)	U32	ro	0	2^{32}-1	60000108h	-
2	Mapping for Button 1	Button status	U32	ro	0	2^{32}-1	60200101h	-
3	Mapping for Button 2	Button status	U32	ro	0	2^{32}-1	60200201h	-
4	Mapping for Button 3	Button status	U32	ro	0	2^{32}-1	60200301h	-
5	Mapping for Button 4	Button status	U32	ro	0	2^{32}-1	60200401h	-
6	Mapping for Button 5	Button status	U32	ro	0	2^{32}-1	60200401h	-
7	Mapping for Button 6	Button status	U32	ro	0	2^{32}-1	60200601h	-
8	Mapping for Button 7	Button status	U32	ro	0	2^{32}-1	60200701h	-
9	Mapping for Button 8	Button status	U32	ro	0	2^{32}-1	60200801h	-
10	Mapping for Button 9	Button status	U32	ro	0	22^{32}-1	60200901h	-
11	Mapping for Button 10	Button status	U32	ro	0	2^{32}-1	60200A01h	-
12	Mapping for Button 11	Button status	U32	ro	0	2^{32}-1	60200B01h	-
13	Mapping for Button 12	Button status	U32	ro	0	2^{32}-1	60200C01h	-
14	Mapping for Button 13	Button status	U32	ro	0	2^{32}-1	60200D01h	-
15	Mapping for Button 14	Button status	U32	ro	0	2^{32}-1	60200E01h	-
16	Mapping for Button 15	Button status	U32	ro	0	2^{32}-1	60200F01h	-
17	Mapping for Button 16	Button status	U32	ro	0	2^{32}-1	60201001h	-
18	Mapping for Button 17	Button status	U32	ro	0	2^{32}-1	60201101h	-
19	Mapping for Button 18	Button status	U32	ro	0	2^{32}-1	60201201h	-
20	Mapping for Button 19	Button status	U32	ro	0	2^{32}-1	60201301h	-
21	Mapping for Button 20	Button status	U32	ro	0	2^{32}-1	60201401h	-
22	Mapping for Button 21	Button status	U32	ro	0	2^{32}-1	60201501h	-
23	Mapping for Button 22	Button status	U32	ro	0	2^{32}-1	60201601h	-

Appendix: CANopen protocol

1A00h Transmit PD01 map parameters (continued)

Sub-index	Name	Description	Data type	Access	Minimum	Maximum	Default	Unit/Scale
24	Mapping for Button 23	Button status	U32	ro	0	2^{32}-1	60201701h	-
25	Mapping for Button 24	Button status	U32	ro	0	2^{32}-1	60201801h	-
26	Reserved	Example: 6000h:2 gives value=60000208h where index=6000h sub-index=02h data type=08h (8 bits)	U32	ro	0	2^{32}-1	60000208h	-
27	Mapping for Button 1	Button enabled	U32	ro	0	2^{32}-1	60201901h	-
28	Mapping for Button 2	Button enabled	U32	ro	0	2^{32}-1	60201A01h	-
29	Mapping for Button 3	Button enabled	U32	ro	0	2^{32}-1	60201B01h	-
30	Mapping for Button 4	Button enabled	U32	ro	0	2^{32}-1	60201C01h	-
31	Mapping for Button 5	Button enabled	U32	ro	0	2^{32}-1	60201D01h	-
32	Mapping for Button 6	Button enabled	U32	ro	0	2^{32}-1	60201E01h	-
33	Mapping for Button 7	Button enabled	U32	ro	0	2^{32}-1	60201F01h	-
34	Mapping for Button 8	Button enabled	U32	ro	0	2^{32}-1	60202001h	-
35	Mapping for Button 9	Button enabled	U32	ro	0	2^{32}-1	60202101h	-
36	Mapping for Button 10	Button enabled	U32	ro	0	2^{32}-1	60202201h	-
37	Mapping for Button 11	Button enabled	U32	ro	0	2^{32}-1	60202301h	-
38	Mapping for Button 12	Button enabled	U32	ro	0	2^{32}-1	60202401h	-
39	Mapping for Button 13	Button enabled	U32	ro	0	2^{32}-1	60202501h	-
40	Mapping for Button 14	Button enabled	U32	ro	0	2^{32}-1	60202601h	-
41	Mapping for Button 15	Button enabled	U32	ro	0	2^{32}-1	60202701h	-
42	Mapping for Button 16	Button enabled	U32	ro	0	2^{32}-1	60202801h	-
43	Mapping for Button 17	Button enabled	U32	ro	0	2^{32}-1	60202901h	-
44	Mapping for Button 18	Button enabled	U32	ro	0	2^{32}-1	60202A01h	-
45	Mapping for Button 19	Button enabled	U32	ro	0	2^{32}-1	60202B01h	-
46	Mapping for Button 20	Button enabled	U32	ro	0	2^{32}-1	60202C01h	-
47	Mapping for Button 21	Button enabled	U32	ro	0	2^{32}-1	60202D01h	-
48	Mapping for Button 22	Button enabled	U32	ro	0	2^{32}-1	60202E01h	-

Appendix: CANopen protocol

1A00h Transmit PD01 map parameters (continued)

Sub-index	Name	Description	Data type	Access	Minimum	Maximum	Default	Unit/Scale
49	Mapping for Button 23	Button enabled	U32	ro	0	2^{32}-1	60202F01h	-
50	Mapping for Button 24	Button enabled	U32	ro	0	2^{32}-1	60203001h	-

1A01h Transmit PD02 map parameters

Sub-index	Name	Description	Data type	Access	Minimum	Maximum	Default	Unit/Scale
0	Number of Mapped Applications Objects in PDO2Tx		U8	ro	0	6	6	-
1	Mapping for X-Axis Proportional	Example: 6401h:1 gives value=64010110h where index=6401h sub-index=01h data type=10h (16 bits)	U32	ro	0	2^{32}-1	64010110h	-
2	Mapping for Y-Axis Proportional		U32	ro	0	2^{32}-1	64010210h	-
3	Reserved	Example: 6405h:1 gives value=64050110h where index=6405h sub-index=01h data type=10h (16 bits)	U32	ro	0	2^{32}-1	64050110h	-
4	Mapping for X-Axis Neutral State	Example: 6404h:1 gives value=64040102h where index=6404h sub-index=01h data type=02h (2 bits)	U32	ro	0	2^{32}-1	64040102h	-
5	Mapping for Y-Axis Neutral State		U32	ro	0	2^{32}-1	64040202h	-
6	Reserved	Example: 6406h:1 gives value=64060102h where index=6406h sub-index=01h data type=02h (2 bits)	U32	ro	0	2^{32}-1	64060102h	-

1A02h Transmit PD03 map parameters

Sub-index	Name	Description	Data type	Access	Minimum	Maximum	Default	Unit/Scale
0	Number of Mapped Applications Objects in PDO3Tx		U8	ro	0	6	6	-
1	Mapping for Grip 1 Proportional	Example: 6401h:1 gives value=64010310h where index=6401h sub-index=03h data type=10h (16 bits)	U32	ro	0	2^{32}-1	64010310h	-

Appendix: CANopen protocol

1A02h Transmit PD03 map parameters (continued)

Sub-index	Name	Description	Data type	Access	Minimum	Maximum	Default	Unit/Scale
2	Mapping for Grip 2 Proportional		U32	ro	0	2^{32}-1	64010410h	-
3	Mapping for Grip 3 Proportional		U32	ro	0	2^{32}-1	64010510h	-
4	Mapping for Grip 1 Axis Neutral State	Example: 6404h:3 gives value=64040302h where index=6404h sub-index=03h data type=02h (2 bits)	U32	ro	0	2^{32}-1	64040302h	-
5	Mapping for Grip 2 Axis Neutral State		U32	ro	0	2^{32}-1	64040402h	-
6	Mapping for Grip 3 Axis Neutral State		U32	ro	0	2^{32}-1	64040502h	-

3000h CAN Baud rate

Sub-index	Name	Description	Data type	Access	Minimum	Maximum	Default	Unit/Scale
0	CAN Baud Rate	Changes the baud rate of the CAN, requires repower.	U32	rw	10000	1000000	125000	-

6000h Read input 8-bit

Sub-index	Name	Description	Data type	Access	Minimum	Maximum	Default	Unit/Scale
0	Number of Inputs 8-Bit		U8	ro	0	1	-	-
1	Proportional Memory Freeze	*Not supported Memory status for the proportional outputs. 0: memory function off (release proportional values) 1: memory functions on (freeze proportional values)	U8	ro	0	0	0	-
2	Proportional Memory Freeze	*Not supported Memory status for the proportional outputs. 0: memory function off (release proportional values) 1: memory functions on (freeze proportional values)	U8	ro	0	0	0	-

Appendix: CANopen protocol

6020h Read input bit (buttons)

Sub-index	Name	Description	Data type	Access	Minimum	Maximum	Default	Unit/Scale
0	Number of Inputs Bits		U8	ro	0	32	32	-
1	Freeze Bit 1	*Not supported Memory status for the proportional outputs. 0: memory function off (release proportional values) 1: memory functions on (freeze proportional values)	U8	ro	0	0	0	-
2	Freeze Bit 2	*Not supported	U8	ro	0	0	0	-
3	Freeze Bit 3	*Not supported	U8	ro	0	0	0	-
4	Freeze Bit 4	*Not supported	U8	ro	0	0	0	-
5	Freeze Bit 5	*Not supported	U8	ro	0	0	0	-
6	Freeze Bit 6	*Not supported	U8	ro	0	0	0	-
7	Freeze Bit 7	*Not supported	U8	ro	0	0	0	-
8	Freeze Bit 8	*Not supported	U8	ro	0	0	0	-
9	Button 1	0: Not Pressed 1: Pressed	U8	ro	0	1	0	-
10	Button 2	See Button 1 (Sub Index 9)	U8	ro	0	1	0	-
11	Button 3	See Button 1 (Sub Index 9)	U8	ro	0	1	0	-
12	Button 4	See Button 1 (Sub Index 9)	U8	ro	0	1	0	-
13	Button 5	See Button 1 (Sub Index 9)	U8	ro	0	1	0	-
14	Button 6	See Button 1 (Sub Index 9)	U8	ro	0	1	0	-
15	Button 7	See Button 1 (Sub Index 9)	U8	ro	0	1	0	-
16	Button 8	See Button 1 (Sub Index 9)	U8	ro	0	1	0	-
17	Button 9	See Button 1 (Sub Index 9)	U8	ro	0	1	0	-
18	Button 10	See Button 1 (Sub Index 9)	U8	ro	0	1	0	-
19	Button 11	See Button 1 (Sub Index 9)	U8	ro	0	1	0	-
20	Button 12	See Button 1 (Sub Index 9)	U8	ro	0	1	0	-
21	Button 13	See Button 1 (Sub Index 9)	U8	ro	0	1	0	-
22	Button 14	See Button 1 (Sub Index 9)	U8	ro	0	1	0	-
23	Button 15	See Button 1 (Sub Index 9)	U8	ro	0	1	0	-
24	Button 16	See Button 1 (Sub Index 9)	U8	ro	0	1	0	-
25	Button 17	See Button 1 (Sub Index 9)	U8	ro	0	1	0	-
26	Button 18	See Button 1 (Sub Index 9)	U8	ro	0	1	0	-
27	Button 19	See Button 1 (Sub Index 9)	U8	ro	0	1	0	-
28	Button 20	See Button 1 (Sub Index 9)	U8	ro	0	1	0	-
29	Button 21	See Button 1 (Sub Index 9)	U8	ro	0	1	0	-
30	Button 22	See Button 1 (Sub Index 9)	U8	ro	0	1	0	-
31	Button 23	See Button 1 (Sub Index 9)	U8	ro	0	1	0	-
32	Button 24	See Button 1 (Sub Index 9)	U8	ro	0	1	0	-
33	Button 1	0: Not Enabled 1: Enabled	U8	ro	0	1	0	-
34	Button 2	See Button 1 (Sub Index 33)	U8	ro	0	1	0	-
35	Button 3	See Button 1 (Sub Index 33)	U8	ro	0	1	0	-
36	Button 4	See Button 1 (Sub Index 33)	U8	ro	0	1	0	-
37	Button 5	See Button 1 (Sub Index 33)	U8	ro	0	1	0	-

Appendix: CANopen protocol

6020h Read input bit (buttons) (continued)

Sub-index	Name	Description	Data type	Access	Minimum	Maximum	Default	Unit/Scale
38	Button 6	See Button 1 (Sub Index 33)	U8	ro	0	1	0	-
39	Button 7	See Button 1 (Sub Index 33)	U8	ro	0	1	0	-
40	Button 8	See Button 1 (Sub Index 33)	U8	ro	0	1	0	-
41	Button 9	See Button 1 (Sub Index 33)	U8	ro	0	1	0	-
42	Button 10	See Button 1 (Sub Index 33)	U8	ro	0	1	0	-
43	Button 11	See Button 1 (Sub Index 33)	U8	ro	0	1	0	-
44	Button 12	See Button 1 (Sub Index 33)	U8	ro	0	1	0	-
45	Button 13	See Button 1 (Sub Index 33)	U8	ro	0	1	0	-
46	Button 14	See Button 1 (Sub Index 33)	U8	ro	0	1	0	-
47	Button 15	See Button 1 (Sub Index 33)	U8	ro	0	1	0	-
48	Button 16	See Button 1 (Sub Index 33)	U8	ro	0	1	0	-
49	Button 17	See Button 1 (Sub Index 33)	U8	ro	0	1	0	-
50	Button 18	See Button 1 (Sub Index 33)	U8	ro	0	1	0	-
51	Button 19	See Button 1 (Sub Index 33)	U8	ro	0	1	0	-
52	Button 20	See Button 1 (Sub Index 33)	U8	ro	0	1	0	-
53	Button 21	See Button 1 (Sub Index 33)	U8	ro	0	1	0	-
54	Button 22	See Button 1 (Sub Index 33)	U8	ro	0	1	0	-
55	Button 23	See Button 1 (Sub Index 33)	U8	ro	0	1	0	-
56	Button 24	See Button 1 (Sub Index 33)	U8	ro	0	1	0	-

6401h Read analog inputs 16-Bit

Sub-index	Name	Description	Data type	Access	Minimum	Maximum	Default	Unit/Scale
0	Number of Analog Inputs 16-Bit		U8	ro	0	10	-	-
1	X-Axis Proportional		S16	ro	-1000	1000	0	%*10
2	Y-Axis Proportional		S16	ro	-1000	1000	0	%*10
3	Grip 1 Proportional		S16	ro	-1000	1000	0	%*10
4	Grip 2 Proportional		S16	ro	-1000	1000	0	%*10
5	Grip 3 Proportional		S16	ro	-1000	1000	0	%*10
6	Axis 5		S16	ro	-1000	1000	0	%*10
7	Axis 6		S16	ro	-1000	1000	0	%*10
8	Axis 7		S16	ro	-1000	1000	0	%*10
9	Axis 8		S16	ro	-1000	1000	0	%*10
10	Axis 9		S16	ro	-1000	1000	0	%*10

Appendix: CANopen protocol

6404h Manufacturer specific input 2-Bit

Sub-index	Name	Description	Data type	Access	Minimum	Maximum	Default	Unit/Scale
0	Number of Mfg Specific Inputs 2-Bit		U8	ro	0	10	-	-
1	X-Axis Proportional Neutral State		U8	ro	0	3	0	00 – Neutral 01 – Out of Neutral 10 – Error 11 – Not Available
2	Y-Axis Proportional Neutral State		U8	ro	0	3	0	See Sub Index 1
3	Grip 1 Proportional Neutral State		U8	ro	0	3	0	See Sub Index 1
4	Grip 2 Proportional Neutral State		U8	ro	0	3	0	See Sub Index 1
5	Grip 3 Proportional Neutral State		U8	ro	0	3	0	See Sub Index 1
6	Axis 5 Neutral State		U8	ro	0	3	0	See Sub Index 1
7	Axis 6 Neutral State		U8	ro	0	3	0	See Sub Index 1
8	Axis 7 Neutral State		U8	ro	0	3	0	See Sub Index 1
9	Axis 8 Neutral State		U8	ro	0	3	0	See Sub Index 1
10	Axis 9 Neutral State		U8	ro	0	3	0	See Sub Index 1

6405h Manufacturer specific reserved 16-Bit

Sub-index	Name	Description	Data type	Access	Minimum	Maximum	Default	Unit/Scale
0	Number of Mfg Specific Reserved 16-Bit		U16	ro	0	1	-	-
1	Reserved 1		U16	ro	0	2^{16}-1	0	

6406h Manufacturer specific reserved 2-Bit

Sub-index	Name	Description	Data type	Access	Minimum	Maximum	Default	Unit/Scale
0	Number of Mfg Specific Reserved 2-Bit		U8	ro	0	1	-	-
1	Reserved 1		U8	ro	0	3	0	

Error handling

General

When an event classified as an error occurs, a CANopen standard error code is sent out in an EMCY message. The emergency message and its contents are shown in the table below. The emergency

Appendix: CANopen protocol

message follows reference CiA Draft Standard 301, Version4.0. Parts of the manufacturer specific error field are used for the more specified error definition.

Emergency message

Byte	0	1	2	3	4	5	6	7
Content	Emergency error code		Error register	Manufacturer specific				

Emergency error codes

CANopen failure code

Inputs	Voltage high		Voltage low		Not calibrated		Redundancy	
	Error code	Manufacturer specific	Error code	Manufacturer specific	Error code	Manufacturer specific	Error code	Manufacturer specific
X	0x3110	0x80	0x3120	0x80	0xFF10	0x80	0xFF20	0x80
Y	0x3110	0x81	0x3120	0x81	0xFF10	0x81	0xFF20	0x81
Grip X	0x3110	0x82	0x3120	0x82	0xFF10	0x82	0xFF20	0x82
Grip Y	0x3110	0x83	0x3120	0x83	0xFF10	0x83	0xFF20	0x83
Grip Theta	0x3110	0x84	0x3120	0x84	0xFF10	0x84	0xFF20	0x84

Manufacturer specific error codes

The manufacturer specific error codes are used to help identify which sensor has experienced failure.

Manufacturer specific definition

Byte 0 occurrence counter	Byte 1 sensor identifier		Byte 2 not used	Byte 3 not used
0-127	Digital inputs	0x00 - 0x3F	0	0
0-127	Digital outputs	0x40 - 0x7F	0	0
0-127	Analog inputs	0x80 - 0xBF	0	0
0-127	Analog outputs	0xC0 - 0xFF	0	0

Error register

The error register can also be read at index 1001h:0.

Standard error resister (bit field) for the emergency message

Code	Bit	Value	Description
Generic	0	0	
Current	1	0	
Voltage	2	0	
Temperature	3	0	
Communication	4	0	
Device	5	0	
Reserved	6	0	
Manufacturer	7	0	

ENGINEERING TOMORROW

Products we offer:

- Bent Axis Motors
- Closed Circuit Axial Piston Pumps and Motors
- Displays
- Electrohydraulic Power Steering
- Electrohydraulics
- Hydraulic Power Steering
- Integrated Systems
- Joysticks and Control Handles
- Microcontrollers and Software
- Open Circuit Axial Piston Pumps
- Orbital Motors
- PLUS+1® GUIDE
- Proportional Valves
- Sensors
- Steering
- Transit Mixer Drives

Danfoss Power Solutions is a global manufacturer and supplier of high-quality hydraulic and electronic components. We specialize in providing state-of-the-art technology and solutions that excel in the harsh operating conditions of the mobile off-highway market. Building on our extensive applications expertise, we work closely with our customers to ensure exceptional performance for a broad range of off-highway vehicles.

We help OEMs around the world speed up system development, reduce costs and bring vehicles to market faster.

Danfoss – Your Strongest Partner in Mobile Hydraulics.

Go to www.powersolutions.danfoss.com for further product information.

Wherever off-highway vehicles are at work, so is Danfoss. We offer expert worldwide support for our customers, ensuring the best possible solutions for outstanding performance. And with an extensive network of Global Service Partners, we also provide comprehensive global service for all of our components.

Please contact the Danfoss Power Solution representative nearest you.

Comatrol
www.comatrol.com

Schwarzmüller-Inverter
www.schwarzmueller-inverter.com

Turolla
www.turollaocg.com

Hydro-Gear
www.hydro-gear.com

Daikin-Sauer-Danfoss
www.daikin-sauer-danfoss.com

Local address:

Danfoss
Power Solutions (US) Company
2800 East 13th Street
Ames, IA 50010, USA
Phone: +1 515 239 6000

Danfoss
Power Solutions GmbH & Co. OHG
Krokamp 35
D-24539 Neumünster, Germany
Phone: +49 4321 871 0

Danfoss
Power Solutions ApS
Nordborgvej 81
DK-6430 Nordborg, Denmark
Phone: +45 7488 2222

Danfoss
Power Solutions Trading (Shanghai) Co., Ltd.
Building #22, No. 1000 Jin Hai Rd
Jin Qiao, Pudong New District
Shanghai, China 201206
Phone: +86 21 3418 5200

Danfoss can accept no responsibility for possible errors in catalogues, brochures and other printed material. Danfoss reserves the right to alter its products without notice. This also applies to products already on order provided that such alterations can be made without changes being necessary in specifications already agreed.
All trademarks in this material are property of the respective companies. Danfoss and the Danfoss logotype are trademarks of Danfoss A/S. All rights reserved.